W1G200-HH77-52

EC axial compact fan

sickle-shaped blades (S series)



ebm-papst Mulfingen GmbH & Co. KG
Bachmühle 2 · D-74673 Mulfingen
Phone +49 7938 81-0
Fax +49 7938 81-110
info1@de.ebmpapst.com
www.ebmpapst.com

Limited partnership · Headquarters Mulfingen
Amtsgericht (court of registration) Stuttgart · HRA 590344

General partner Elektrobau Mulfingen GmbH · Headquarters Mulfingen
Amtsgericht (court of registration) Stuttgart · HRB 590142

Nominal data

Type	**W1G200-HH77-52**	
Motor	**M1G074-BF**	
Nominal voltage	VDC	24
Nominal voltage range	VDC	16 .. 28
Method of obtaining data		fa
Speed (rpm)	min-1	2950
Power consumption	W	55
Current draw	A	2.6
Max. back pressure	Pa	120
Max. back pressure	in. wg	0.48
Min. ambient temperature	°C	-25
Max. ambient temperature	°C	60

ml = Max. load · me = Max. efficiency · fa = Free air · cs = Customer specification · ce = Customer equipment
Subject to change

EC axial compact fan

sickle-shaped blades (S series)

Technical description

Weight	2.13 kg
Size	200 mm
Motor size	74
Rotor surface	Painted black
Blade material	Sheet steel, painted black
Fan housing material	Die-cast aluminum
Number of blades	9
Airflow direction	V
Direction of rotation	Counterclockwise, viewed toward rotor
Degree of protection	IP42
Insulation class	"B"
Moisture (F) / Environmental (H) protection class	F0; H0 - dry environment
Max. permitted ambient temp. for motor (transport/storage)	+ 80 °C
Min. permitted ambient temp. for motor (transport/storage)	- 40 °C
Installation position	Any
Condensation drainage holes	None
Mode	S1
Motor bearing	Ball bearing
Technical features	- Tach output - Motor current limitation - Soft start - Control input 0-10 VDC / PWM
EMC immunity to interference	According to EN 61000-6-2 (industrial environment)
EMC interference emission	According to EN 55022 (Class B)
Electrical hookup	Via terminal strip
Motor protection	Reverse polarity and locked-rotor protection
Conformity with standards	EN 60335-1
Approval	EAC; UL 1004-1; CSA C22.2 No. 77

ebm-papst Mulfingen GmbH & Co. KG · Bachmühle 2 · D-74673 Mulfingen · Phone +49 (0) 7938 81-0 · Fax +49 (0) 7938 81-110 · info1@de.ebmpapst.com · www.ebmpapst.com

EC axial compact fan

sickle-shaped blades (S series)

Product drawing

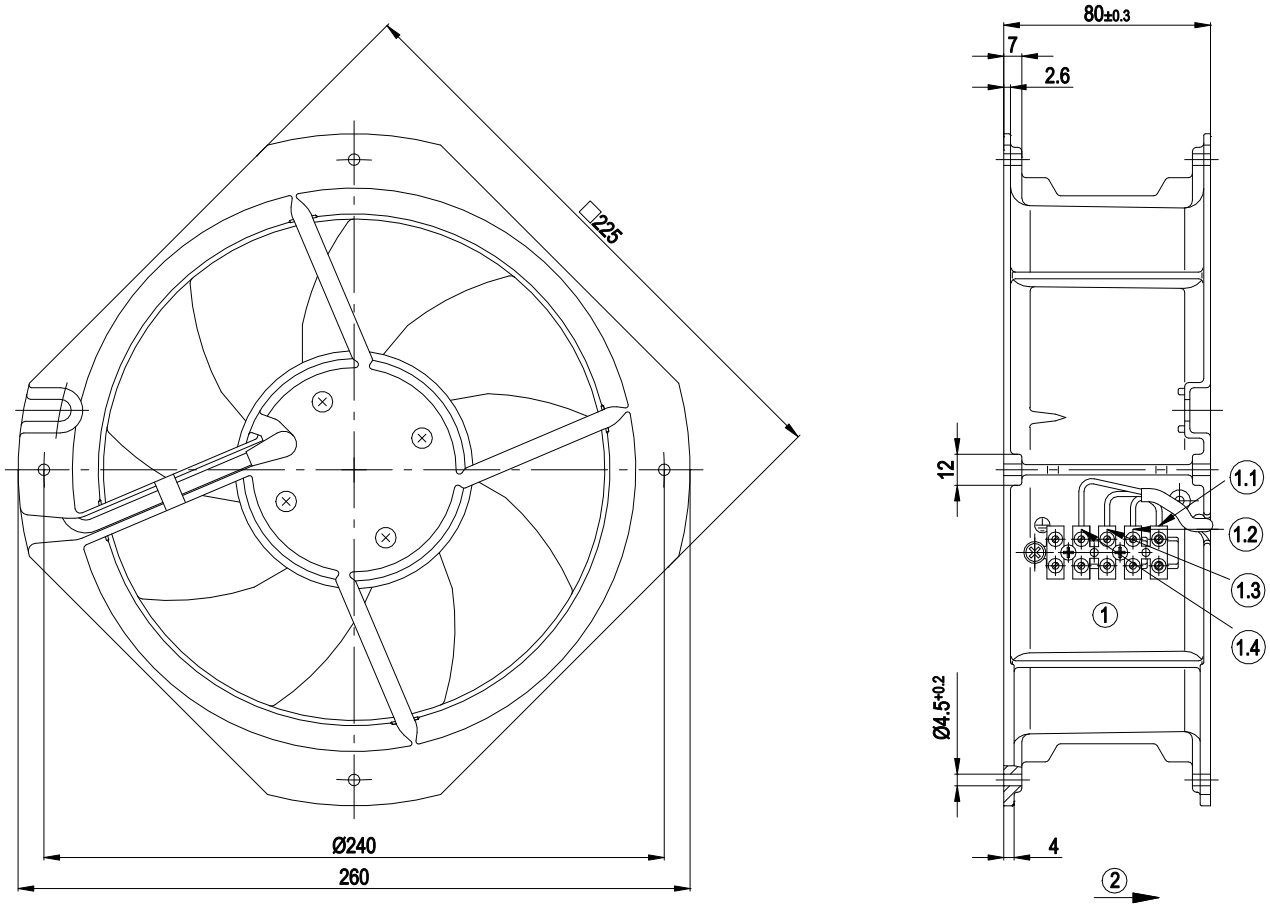

1	Connection: terminal strip with 5 terminals.
1.1	UN +24 VDC (red)
1.2	GND (blue)
1.3	DUE (white)
1.4	0-10 VDC (yellow)
2	Direction of air flow "V"

ebm-papst Mulfingen GmbH & Co. KG · Bachmühle 2 · D-74673 Mulfingen · Phone +49 (0) 7938 81-0 · Fax +49 (0) 7938 81-110 · info1@de.ebmpapst.com · www.ebmpapst.com

EC axial compact fan

sickle-shaped blades (S series)

Connection diagram

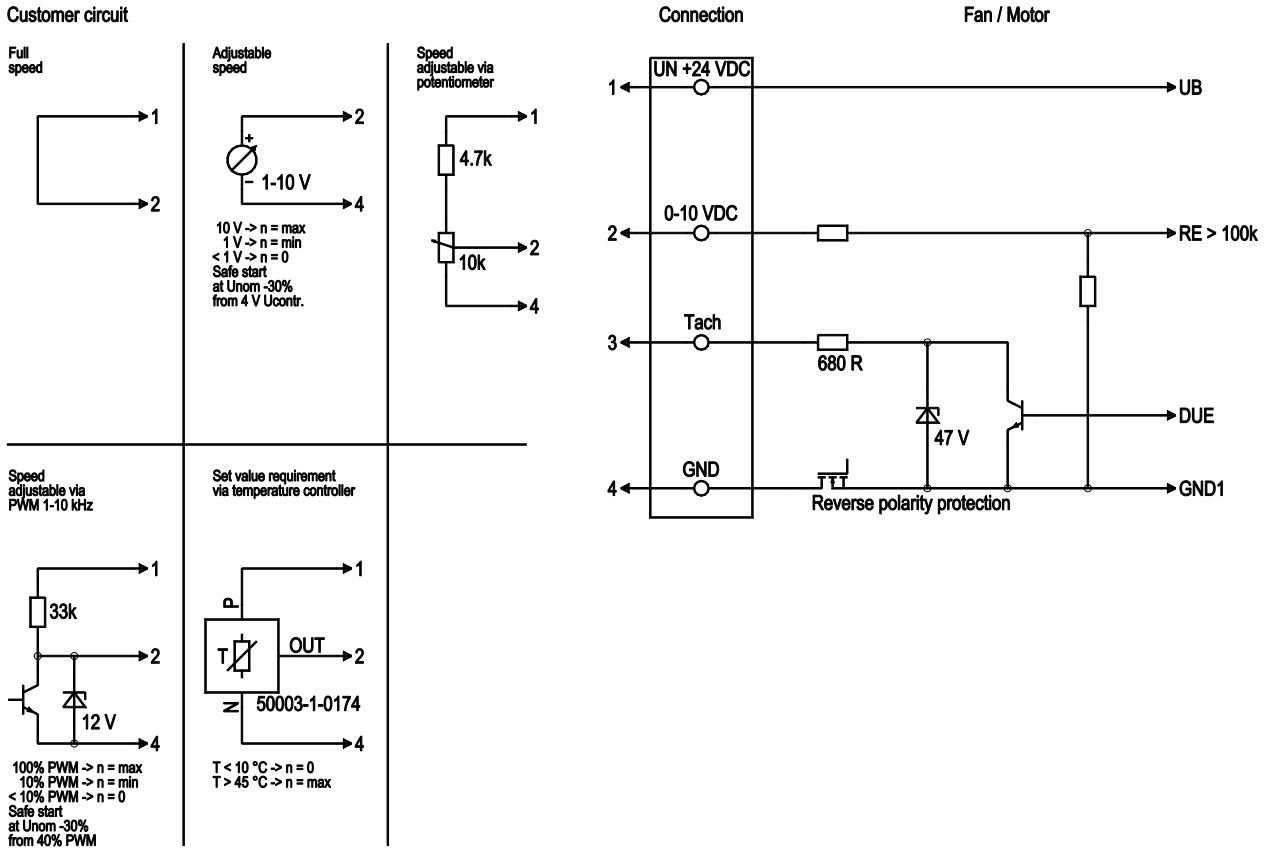

No.	Conn.	Designation	Color	Function/assignment
1	1	Un +24 VDC	red	Power supply 24 VDC, maximum ripple 3.5 %
1	2	0-10 VDC	yellow	Control input Re > 100k
1	3	Tach	white	Tach output, 3 pulses per revolution, Isink max = 10 mA
1	4	GND	blue	Reference ground

ebm-papst Mulfingen GmbH & Co. KG · Bachmühle 2 · D-74673 Mulfingen · Phone +49 (0) 7938 81-0 · Fax +49 (0) 7938 81-110 · info1@de.ebmpapst.com · www.ebmpapst.com

EC axial compact fan

sickle-shaped blades (S series)

Curves: Air performance

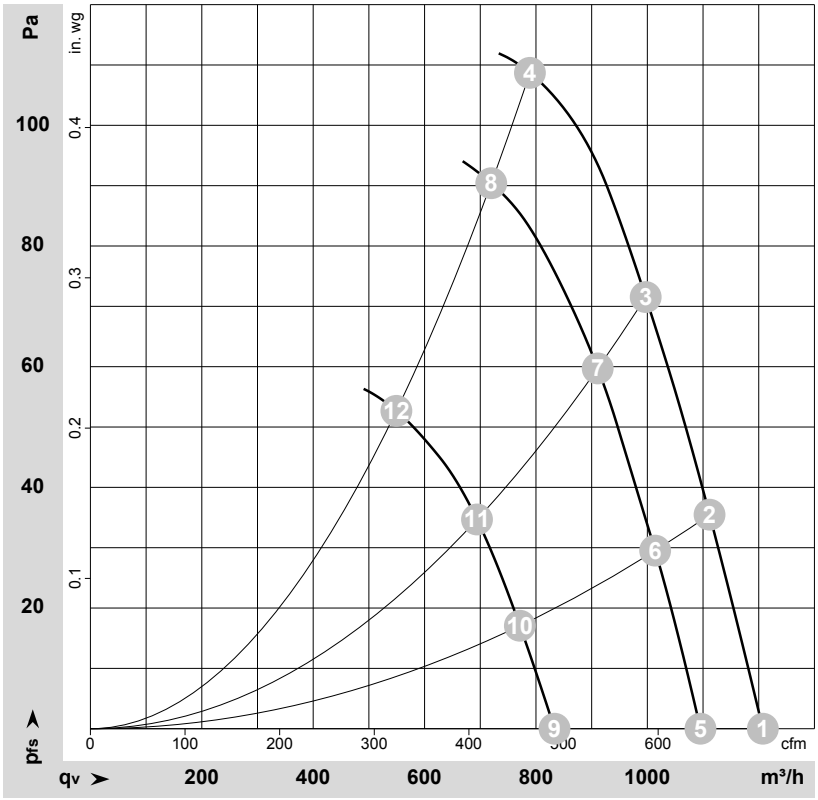

ρ = 1.15 kg/m³ ± 2 %

Measurement: LU-48037-1
Measurement: LU-48036-1
Measurement: LU-48038-1

Air performance measured according to ISO 5801 installation category A. For detailed information on the measurement setup, contact ebm-papst. Intake sound level: Sound power level according to ISO 13347 / sound pressure level measured at 1 m distance from fan axis. The values given are valid under the specified measuring conditions and may vary due to conditions of installation. For deviations from the standard configuration, the parameters have to be checked on the installed unit.

Measured values

	U	n	P_{ed}	I	q_V	p_{fs}	q_V	p_{fs}
	V	min^{-1}	W	A	m^3/h	Pa	cfm	in. wg
1	28	3285	73	2.91	1205	0	710	0.00
2	28	3200	76	3.01	1110	37	655	0.15
3	28	3140	78	3.11	995	72	585	0.29
4	28	3060	83	3.27	790	109	465	0.44
5	24	2950	55	2.60	1095	0	645	0.00
6	24	2915	57	2.67	1015	30	595	0.12
7	24	2860	60	2.77	910	60	535	0.24
8	24	2785	63	2.89	720	90	425	0.36
9	16	2285	28	2.08	835	0	490	0.00
10	16	2245	28	2.10	770	18	455	0.07
11	16	2195	29	2.13	695	35	410	0.14
12	16	2145	30	2.18	550	53	325	0.21

U = Voltage · n = Speed (rpm) · P_{ed} = Power consumption · I = Current draw · q_V = Air flow · p_{fs} = Pressure increase

ebm-papst Mulfingen GmbH & Co. KG · Bachmühle 2 · D-74673 Mulfingen · Phone +49 (0) 7938 81-0 · Fax +49 (0) 7938 81-110 · info1@de.ebmpapst.com · www.ebmpapst.com