NU 2207 ECP

Popular item
SKF Explorer

Dimensions

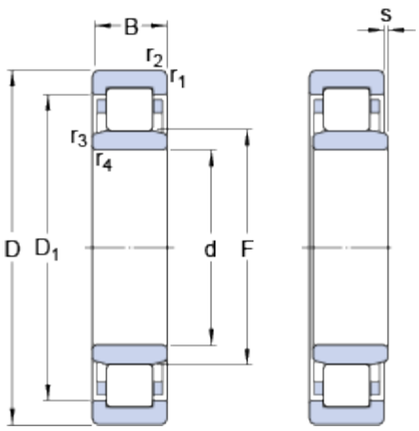

d		35	mm
D		72	mm
B		23	mm
D_1	≈	60.2	mm
F		44	mm
$r_{1,2}$	min.	1.1	mm
$r_{3,4}$	min.	0.6	mm
s	max.	2.8	mm

Abutment dimensions

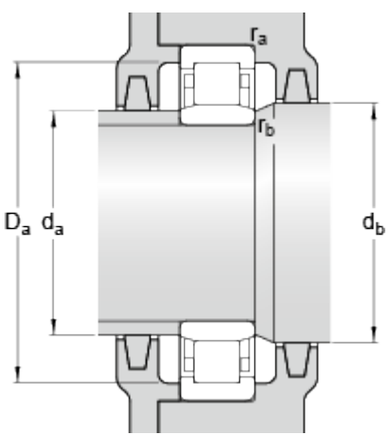

d_a	min.	39.8	mm
d_a	max.	42.2	mm
d_b	min.	46	mm
D_a	max.	65.1	mm
r_a	max.	1	mm
r_b	max.	0.6	mm

Calculation data

Basic dynamic load rating	C	69.5	kN
Basic static load rating	C_0	63	kN
Fatigue load limit	P_u	8.15	kN
Reference speed		11000	r/min
Limiting speed		12000	r/min
Calculation factor	k_r	0.2	
Limiting value	e	0.3	
Axial load factor	Y	0.4	

Mass

Mass bearing		0.4	kg