NOTES

Constructed from extruded Al with a minimum thickness of 0.06"(1.5mm)
Available in clear or Black anodized finish
Version 2 includes two Black plastic one piece bezel/panels.
Hardware and self-adhesive rubber feet included.

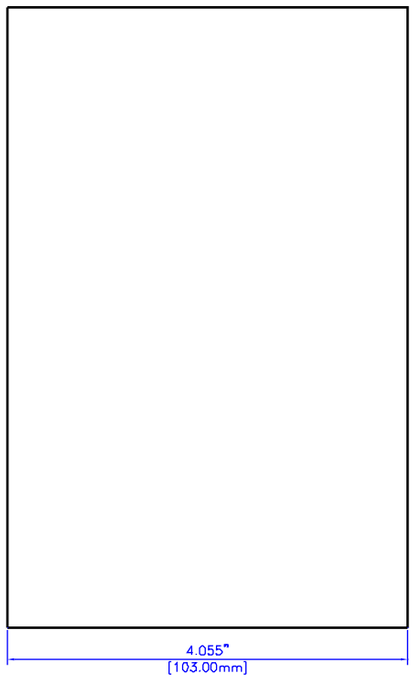

EXTRUSION

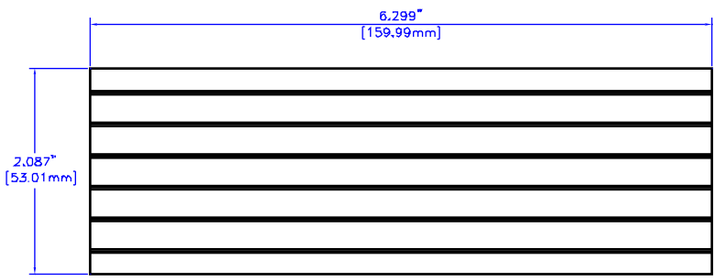

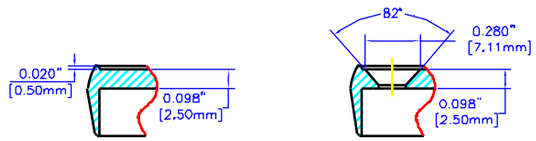

SECTION A-A
SCALE 2:1

SECTION B-B
SCALE 2:1

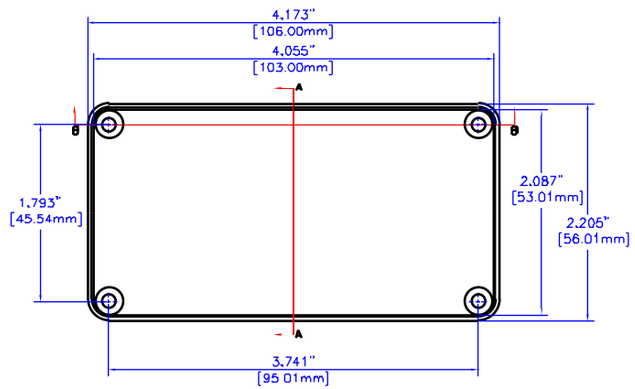

PANEL

For the best fit print on legal size paper.

THIS DRAWING IS PROPRIETARY INFORMATION OF HAMMOND MFG.CO.LTD. NOT TO BE USED WITHOUT EXPRESSED WRITTEN PERMISSION OF HAMMOND MFG.CO.LTD.

Rev	ECN	Description		Date	By
A	N/A	RELEASE	----	01 15 02	MJM

Unless otherwise spec'd dimensions are in inches
Tolerances are:
.X ± .1
.XX ± .02
.XXX ± .010
.XXXX ± .0005
Holes ± .0050
Angles ± .5°

Dwn	M. MERCER
Date	01 15 02
Chk	---
Mat'l	Extruded Aluminum
Sheet	1 of 2

HAMMOND MANUFACTURING CO. LTD.
Electronics Group, Waterloo, Ont. - Cheektowaga, NY

HAMMOND 1455 SERIES EXTRUDED ALUMINUM

Part#: 1455N1602 | Dwg: 1455N1602A

NOTES

Constructed from extruded Al with a minimum thickness of 0.06"(1,5mm)
Available in clear or Black anodized finish
Version 2 includes two Black plastic one piece bezel/panels.
Hardware and self-adhesive rubber feet included.

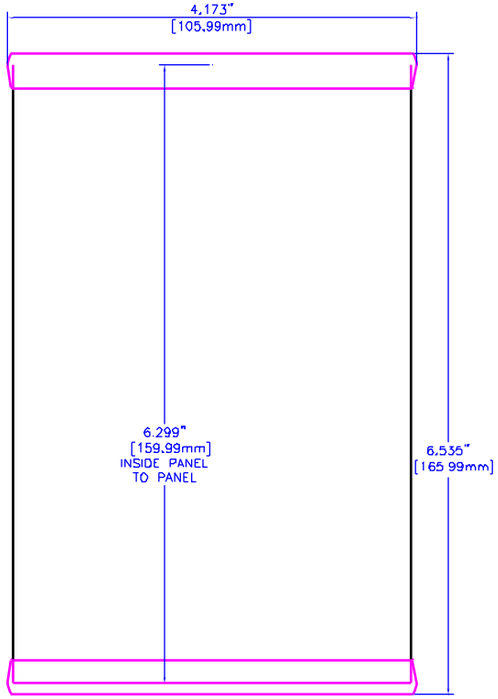



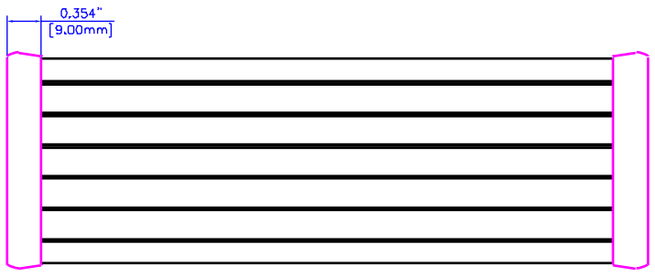

ASSEMBLED

For the best fit print on legal size paper.

THIS DRAWING IS PROPRIETARY INFORMATION OF HAMMOND MFG.CO.LTD. NOT TO BE USED WITHOUT EXPRESSED WRITTEN PERMISSION OF HAMMOND MFG.CO.LTD.

Rev	ECN	Description		Date	By
A	N/A	RELEASE	----	01 15 02	MJM

Unless otherwise spec'd dimensions are in inches
Tolerances are:
.X ± .1
.XX ± .02
.XXX ± .010
.XXXX ± .0050
Holes ± .005
Angles ± .5°

Dwn	M. MERCER
Date	01 15 02
Chk	---
Mat'l	Extruded Aluminum
Sheet	2 of 2

HAMMOND MANUFACTURING CO. LTD.
Electronics Group, Waterloo, Ont. - Cheektowaga, NY

HAMMOND 1455 SERIES EXTRUDED ALUMINUM

Part#: 1455N1602 Dwg: 1455N1602A