Standard
mechanical multiturn, optical

Sendix 5868 / 5888 (shaft / hollow shaft)

CANopen/CANopenLift



The Sendix multiturn encoders 5868 and 5888 with CANopen or CANopenLift interface and optical sensor technology are the right encoders for all CANopen or CANopenLift applications.

With a maximum resolution of 28 bits these encoders offer an optional additional RS422 incremental track with 2048 pulses.

Mechanical drive | Safety-Lock™ | High rotational speed | Temperature range (-40°...+80°C) | High protection level (IP) | High shaft load capacity | Magnetic field proof | Shock / vibration resistant | Reverse polarity protection | SinCos

Reliable

- Tried-and-tested in applications with the highest demands, such as in mobile automation or medical technology.
- Ideal for use outdoors thanks to IP67 protection and wide temperature range from -40 °C up to +80 °C.

Flexible

- Node address can be set via rotary switches or software.
- Baud rate and termination can be set via DIP switches or software.
- With bus terminal cover or fixed connection, as well as M12 connectors or cable connection.
- Universal scaling function.

Order code Shaft version

8.5868	.	X	X	X	X	.	XXX	X
Type		a	b	c	d		e	f

If for each parameter of an encoder the **underlined preferred option** is selected, then the delivery time will be 10 working days for a maximum of 10 pieces. Qts. up to 50 pcs. of these types generally have a delivery time of 15 working days.

10 by 10

a *Flange*

1 = clamping flange, IP65 ø 58 mm [2.28"]
3 = clamping flange, IP67 ø 58 mm [2.28"]
2 = synchro flange, IP65 ø 58 mm [2.28"]
4 = synchro flange, IP67 ø 58 mm [2.28"]
5 = square flange, IP65 □63.5 mm [2.5"]
7 = square flange, IP67 □63.5 mm [2.5"]

b *Shaft (ø x L), with flat*

1 = 6 x 10 mm [0.24 x 0.39"] [1]
2 = 10 x 20 mm [0.39 x 0.79"] [2]
3 = 1/4" x 7/8"
4 = 3/8" x 7/8"

c *Interface / power supply*

2 = CANopen DS301 V4.02, 10 ... 30 V DC
5 = CANopen DS301 V4.02, 10 ... 30 V DC with 2048 ppr incremental track (TTL-compatible) [3]

d *Type of connection*

removable bus terminal cover
1 = radial cable gland
2 = 2 x or 3 x M12 connector, 5-pin
Fixed connection without bus terminal cover
A = radial cable, 2 m [6.56'] PVC
B = radial cable, special length PVC *)
E = 1 x radial M12 connector, 5-pin
F = 2 x radial M12 connector, 5-pin
I = 1 x radial M23 connector, 12-pin
J = 2 x radial M23 connector, 12-pin
K = 1 x Sub-D connector, 9-pin

*) Available special lengths (connection type B): 3, 5, 8, 10, 15 m [9.84, 16.40, 26.25, 32.80, 49.21'] order code expansion .XXXX = length in dm ex.: 8.5868.112B.2123.0030 (for cable length 3 m)

Optional on request
- Ex 2/22 [4]
- surface protection salt spray tested
- seawater resistant (stainless steel V4A)

e *Fieldbus profile*

212 = CANopen
221 = CANlift DS417 V1.01

f *Options (service)*

2 = no options
3 = SET button

Salt spray tested / stainless steel V4A as standard types (deliverable as from 1 unit)

salt spray tested: 8.5868.3222.2122-C

V4A 1.4404 stainless steel V4A: 8.5868.3222.2122-V4A

1) Preferred type only in conjunction with flange type 2.
2) Preferred type only in conjunction with flange type 1.
3) Only in conjunction with connection type 2.
4) For the cable connection type, cable material PUR.

© Fritz Kübler GmbH, subject to errors and changes. 11/2023

Standard
mechanical multiturn, optical | **Sendix 5868 / 5888 (shaft / hollow shaft)** | **CANopen/CANopenLift**

Order code Hollow shaft

8.5888	.	X	X	X	X	.	X	X	X
Type		a	b	c	d		e		f

If for each parameter of an encoder the **underlined preferred option** is selected, then the delivery time will be 10 working days for a maximum of 10 pieces. Qts. up to 50 pcs. of these types generally have a delivery time of 15 working days.

10 by 10

a *Flange*
1 = with spring element, long, IP65
2 = with spring element, long, IP67
3 = with stator coupling, IP65 ø 65 mm [2.56"]
4 = with stator coupling, IP67 ø 65 mm [2.56"]
5 = with stator coupling, IP65 ø 63 mm [2.48"]
6 = with stator coupling, IP67 ø 63 mm [2.48"]

b *Blind hollow shaft*
(insertion depth max. 30 mm [1.18"])
3 = ø 10 mm [0.39"]
4 = ø 12 mm [0.47"]
5 = ø 14 mm [0.55"]
6 = ø 15 mm [0.59"]
8 = ø 3/8"
9 = ø 1/2"

c *Interface / power supply*
2 = CANopen DS301 V4.02, 10 ... 30 V DC
5 = CANopen DS301 V4.02, 10 ... 30 V DC with 2048 ppr incremental track (TTL-compatible) [1]

d *Type of connection*
removable bus terminal cover
1 = radial cable gland
2 = 2 x or 3 x M12 connector, 5-pin
Fixed connection without bus terminal cover
A = radial cable, 2 m [6.56'] PVC
B = radial cable, special length PVC *)
E = 1 x radial M12 connector, 5-pin
F = 2 x radial M12 connector, 5-pin
I = 1 x radial M23 connector, 12-pin
J = 2 x radial M23 connector, 12-pin
K = 1 x Sub-D connector, 9-pin

*) Available special lengths (connection type B):
3, 5, 8, 10, 15 m [9.84, 16.40, 26.25, 32.80, 49.21']
order code expansion .XXXX = length in dm
ex.: 8.5888.542B.2123.0030 (for cable length 3 m)

Optional on request
- Ex 2/22 [2]
- surface protection salt spray tested
- seawater resistant (stainless steel V4A)

Salt spray tested / stainless steel V4A as standard types (deliverable as from 1 unit)
salt spray tested:
8.5888.2422.2122-C
8.5888.2522.2122-C

V4A 1.4404
stainless steel V4A:
8.5888.2422.2122-V4A

e *Fieldbus profile*
212 = CANopen
221 = CANlift DS417 V1.01

f *Options (service)*
2 = no options
3 = SET button

Mounting accessory for shaft encoders		Order no
Kupplung	bellows coupling ø 19 mm [0.75"] for shaft 6 mm [0.24"]	**8.0000.1102.0606**
	bellows coupling ø 19 mm [0.75"] for shaft 10 mm [0.39"]	**8.0000.1102.1010**

Mounting accessory for hollow shaft encoders Dimensions in mm [inch]		Order no
Torque pin, ø 4 mm for flange with spring element (flange type 1 + 2)	with fixing thread	**8.0010.4700.0000**

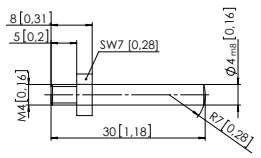

Cables and connectors			Order no
Preassembled cables	M12 female connector with coupling nut, 5-pin, A coded, straight single-ended 5 m [16.40'] PVC cable	bus in	**05.00.6091.A211.005M**
	M12 male connector with external thread, 5-pin, A coded, straight single-ended 5 m [16.40'] PVC cable	bus out	**05.00.6091.A411.005M**
Connectors	M12 female connector with coupling nut, 5-pin, A coded, straight (metal)	bus in	**8.0000.5116.0000**
	M12 female connector with coupling nut, 5-pin, B coded, straight (metal)	incremental track	**05.BMWS 8151-8.5**
	M12 male connector with external thread, 5-pin, A coded, straight (metal)	bus out	**8.0000.5111.0000**

Further Kübler accessories can be found at: kuebler.com/accessories
Further Kübler cables and connectors can be found at: kuebler.com/connection-technology

1) Only in conjunction with connection type 2.
2) For the cable connection type, cable material PUR.

© Fritz Kübler GmbH, subject to errors and changes. 11/2023

Standard
mechanical multiturn, optical

Sendix 5868 / 5888 (shaft / hollow shaft)

CANopen/CANopenLift

Technical data

Mechanical characteristics

Maximum speed		
	IP65 up to 70 °C [158 °F]	9000 min^{-1}, 7000 min^{-1} (continuous)
	IP65 up to T_{max}	7000 min^{-1}, 4000 min^{-1} (continuous)
	IP67 up to 70 °C [158 °F]	8000 min^{-1}, 6000 min^{-1} (continuous)
	IP67 up to T_{max}	6000 min^{-1}, 3000 min^{-1} (continuous)
Starting torque - at 20 °C [68 °F]	IP65	< 0.01 Nm
	IP67	< 0.05 Nm
Mass moment of inertia		
	shaft version	4.0 x 10^{-6} kgm^2
	hollow shaft version	7.5 x 10^{-6} kgm^2
Load capacity of shaft	radial	80 N
	axial	40 N
Weight	with bus terminal cover	approx. 0.57 kg [20.11 oz]
	with fixed connection	approx. 0.52 kg [18.34 oz]
Protection acc. to EN 60529		
	housing side	IP67
	shaft side	IP65, opt. IP67
Working temperature range		-40 °C ... +80 °C [-40 °F ... +176 °F] [1]
Material	shaft/hollow shaft	stainless steel
	flange	aluminum
	housing	zinc die-cast
	cable	PVC (PUR for Ex 2/22)
Shock resistance acc. to EN 60068-2-27		2500 m/s^2, 6 ms
Vibration resistance acc. to EN 60068-2-6		100 m/s^2, 55 ... 2000 Hz

Electrical characteristics

Power supply	10 ... 30 V DC
Power consumption (no load)	max. 100 mA
Reverse polarity protection of the power supply	yes

Incremental track characteristics

Output driver		RS422 (TTL-compatible)
Permissible load / channel		max. +/- 20 mA
Signal level	HIGH	typ. 3.8 V
	LOW	typ. 1.3 V
Short circuit proof outputs		yes [2]
Resolution		2048 ppr

SET button (zero or defined value, option)

Protection against accidental activation.
Button can only be operated with a ball-pen or pencil.

Diagnostic LED (yellow)

LED is ON with the following fault conditions

Sensor error (internal code or LED error) too low voltage, over-temperature

Interface characteristics CANopen/CANopenLift

Resolution singleturn (MUR)		
	scalable	1 ... 65 536 (16 bit)
	default	8 192 (13 bit)
Number of revolutions (NDR)		1 ... 4 096 (12 bit) scalable only via the total resolution
Total resolution (TMR)		
	scalable	1 ... 268 435 456 (28 bit)
	default	33 554 432 (25 bit)
Interface		CAN high-speed acc. to ISO 11898, Basic- and Full-CAN CAN specification 2.0 B
Protocol		CANopen profile DS406 V3.2 with manufacturer-specific add-ons or CANlift profile DS417 V1.1
Baud rate		10 ... 1000 kbit/s can be set via DIP switches, software configurable
Node address		1 ... 127 can be set via rotary switches, software configurable
Termination switchable		can be set via DIP switches, software configurable

Approvals

UL compliant in accordance with	File no. E224618
CE compliant in accordance with	
EMC Directive	2014/30/EU
RoHS Directive	2011/65/EU
ATEX Directive	2014/34/EU (for Ex 2/22 variants)

1) Cable version: -30 °C ... +75 °C [-22 °F ... +167 °F].
2) Short circuit to 0 V or to output, only one channel at a time, power supply correctly applied.

© Fritz Kübler GmbH, subject to errors and changes. 11/2023

Standard
mechanical multiturn, optical | **Sendix 5868 / 5888 (shaft / hollow shaft)** | **CANopen/CANopenLift**

General information about CANopen / CANopenLift

The CANopen encoders support the latest CANopen communication profile according to DS301 V4.02 . In addition, device specific profiles such as encoder profile DS406 V3.2 and DS417 V1.1 (for lift applications) are available

The following operating modes may be selected: Polled Mode, Cyclic Mode, Sync Mode. Moreover, scale factors, preset values, limit switch values and many other additional parameters can be programmed via the CAN bus.
When switching the device on, all parameters are loaded from an EEPROM, where they were saved previously to protect them against power-failure.

The following output values may be combined in a freely variable way as PDO (PDO mapping): position, speed, acceleration as well as the status of the working area.

As competitively priced alternatives, encoders are also available with a connector or a cable connection, where the device address and baud rate can be changed and configured by means of the software. The models with bus terminal cover and integrated T-coupler allow for extremely simple installation: the bus and power supply can be easily connected via M12 connectors. The device address can be set via 2 rotary hex switches. Furthermore, another DIP switch allows for the setting of the baud rate and switching on a termination resistor. Three LEDs located on the back indicate the operating or fault status of the CAN bus, as well as the status of an internal diagnostic.

Universal Scaling Function

At the end of the physical resolution of an encoder, **when scaling is active**, an error appears if the division of the physical limit (GP_U) by the programmed total resolution (TMR) does not produce an integer.

The Universal Scaling Function remedies this problem.

CANopen communication profile DS301 V4.02

Among others, the following functionality is integrated.

- Class C2 functionality.
- NMT slave.
- Heartbeat protocol.
- High resolution sync protocol.
- Identity object.
- Error behavior object.
- Variable PDO mapping.
- Self-start programmable (power on to operational).
- 3 Sending PDO's.
- Node address, baud rate and CANbus.
- Programmable termination.

CANopen Encoder Profile DS406 V3.2

The following parameters can be programmed:

- Event mode.
- Units for speed selectable (steps/sec or min^{-1}).
- Factor for speed calculation (e.g. circumference of measuring wheel).
- Integration time for the speed value from 1 ... 32.
- 2 working areas with 2 upper and lower limits and the corresponding output states.
- Variable PDO mapping for position, speed, work area status.
- Extended failure management for position sensing with integrated temperature control.
- User interface with visual display of bus and failure status - 3 LED's.
- Optional - 32 CAMs programmable.
- Customer-specific memory - 16 Bytes.

CANopen Lift Profile DS417 V1.1

Among others, the following functionality is integrated:

- Car position unit.
- 2 virtual devices.
- 1 virtual device delivers the position in absolute measuring steps (steps).
- 1 virtual device delivers the position as an absolute travel information in mm.
- Lift number programmable.
- Independent setting of the node address in relation with the CAN identifier.
- Factor for speed calculation (e.g. measuring wheel periphery).
- Integration time for speed value of 1...32.
- 2 work areas with 2 upper and lower limits and the corresponding output states.
- Variable PDO mapping for position, speed, acceleration, work area status.
- Extended failure management for position sensing with integrated temperature control.
- User interface with visual display of bus and failure status - 3 LED's.
- "Watchdog controlled" device.

All profiles stated here: Key-features
The object 6003h "Preset" is assigned to an integrated key, accessible from the outside.

© Fritz Kübler GmbH, subject to errors and changes. 11/2023

Standard mechanical multiturn, optical | **Sendix 5868 / 5888 (shaft / hollow shaft)** | **CANopen/CANopenLift**

Terminal assignment

Interface	Type of connection	Cable gland (bus terminal cover with terminal box)										
			Bus OUT					Bus IN				
2, 5	1	Signal:	CAN_GND	CAN_L	CAN_H	0 V power supply	+V power supply	0 V power supply	+V power supply	CAN_L	CAN_H	CAN_GND
		Abbreviation:	CG	CL	CH	0 V	+V	0 V	+V	CL	CH	CG

Interface	Type of connection	Cable (isolate unused cores individually before initial start-up)					
			Bus IN				
2, 5	A, B	Signal:	0 V power supply	+V power supply	CAN_L	CAN_H	CAN_GND
		Core color:	WH	BN	YE	GN	GY

Interface	Type of connection	2 x M12 connector, 5-pin (3 x M12 connector with interface 5)						
			Bus OUT					
2, 5	2, F	Signal:	0 V power supply	+V power supply	CAN_L	CAN_H)	CAN_GND	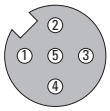
		Pin:	3	2	5	4	1	
			Bus IN					
		Signal:	0 V power supply	+V power supply	CAN_L	CAN_H	CAN_GND	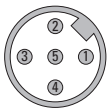
		Pin:	3	2	5	4	1	
			Incremental track					
5	2	Signal:	A	$\overline{A}$	B	$\overline{B}$	0 V	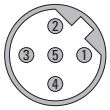
		Pin:	1	2	3	4	5	

Interface	Type of connection	1 x M12 connector, 5-pin					
			Bus IN				
2, 5	E	Signal:	0 V power supply	+V power supply	CAN_L	CAN_H	CAN_GND
		Pin:	3	2	5	4	1



Interface	Type of connection	2 x M23 connector, 12-pin					
			Bus OUT				
2, 5	J	Signal:	0 V power supply	+V power supply	CAN_L	CAN_H	CAN_GND
		Pin:	10	12	2	7	3
			Bus IN				
		Signal:	0 V power supply	+V power supply	CAN_L	CAN_H	CAN_GND
		Pin:	10	12	2	7	3

2 x 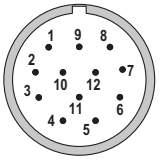

Interface	Type of connection	1 x M23 connector, 12-pin					
			Bus IN				
2, 5	I	Signal:	0 V power supply	+V power supply	CAN_L	CAN_H	CAN_GND
		Pin:	10	12	2	7	3

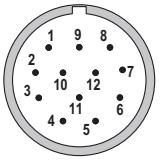

Interface	Type of connection	Sub-D connector, 9-pin						
			Bus IN					
2, 5	K	Signal:	0 V power supply	+V power supply	CAN_L	CAN_H	CAN_GND	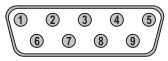
		Pin:	6	9	2	7	3	

Standard
mechanical multiturn, optical | **Sendix 5868 / 5888 (shaft / hollow shaft)** | **CANopen/CANopenLift**

Dimensions shaft version, with removable bus terminal cover

Dimensions in mm [inch]

Clamping flange, ø 58 [2.28]
Flange type 1 and 3
(drawing with 2 x M12 connector)

1 3 x M3, 6 [0.24] deep
2 3 x M4, 8 [0.32] deep

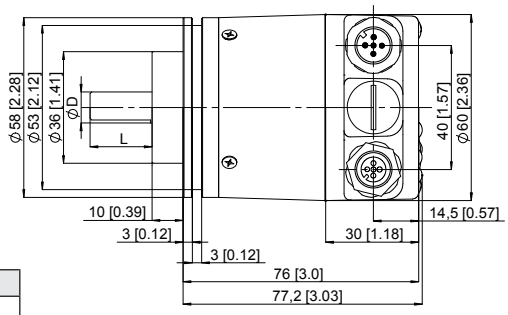

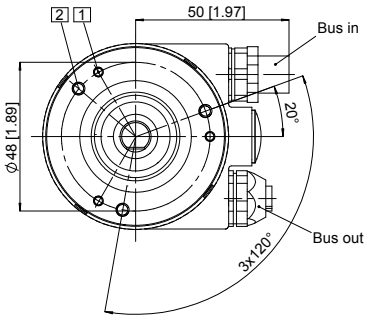

D	Fit	L
6 [0.24]	h7	10 [0.39]
10 [0.39]	f7	20 [0.79]
1/4“	h7	7/8“
3/8“	h7	7/8“

Synchro flange, ø 58 [2.28]
Flange type 2 and 4
(drawing with cable)

1 3 x M4, 6 [0.24] deep

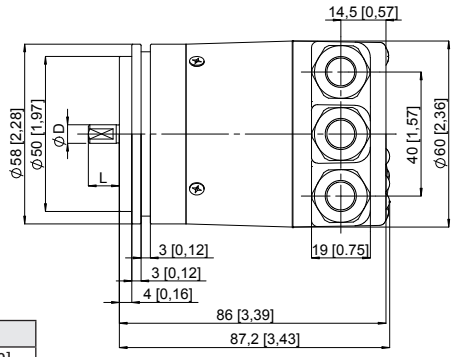

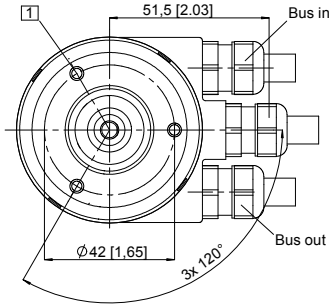

D	Fit	L
6 [0.24]	h7	10 [0.39]
10 [0.39]	f7	20 [0.79]
1/4“	h7	7/8“
3/8“	h7	7/8“

Square flange, □ 63.5 [2.5]
Flange type 5 and 7
(drawing with cable)

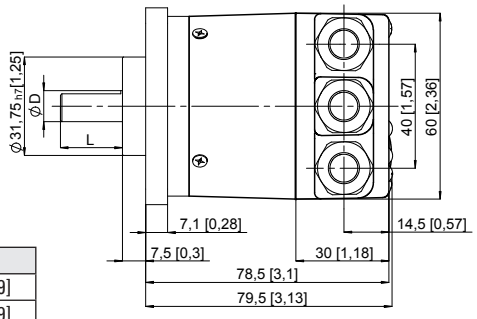

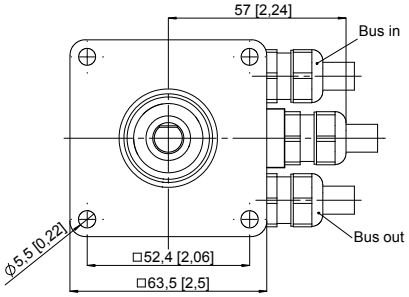

D	Fit	L
6 [0.24]	h7	10 [0.39]
10 [0.39]	f7	20 [0.79]
1/4“	h7	7/8“
3/8“	h7	7/8“

© Fritz Kübler GmbH, subject to errors and changes. 11/2023

Standard
mechanical multiturn, optical | **Sendix 5868 / 5888 (shaft / hollow shaft)** | **CANopen/CANopenLift**

Dimensions shaft version, with fixed connection

Dimensions in mm [inch]

Synchro flange, ø 58 [2.28]
Flange type 2 and 4
(drawing with M23 connector)

1 3 x M4, 6 [0.24] deep

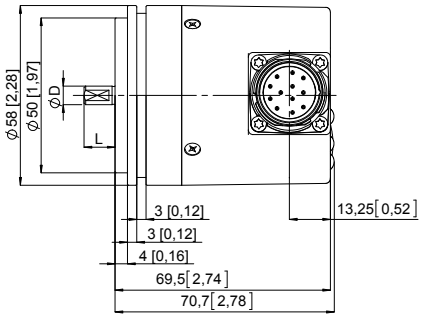

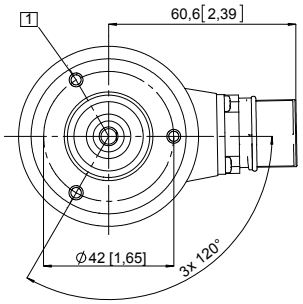

D	Fit	L
6 [0.24]	h7	10 [0.39]
10 [0.39]	f7	20 [0.79]
1/4"	h7	7/8"
3/8"	h7	7/8"

Synchro flange, ø 58 [2.28]
Flange type 2 and 4
(drawing with Sub-D connector)

1 3 x M4, 6 [0.24] deep
2 2 x 4/40 UNC; 3.0 [0.12] deep

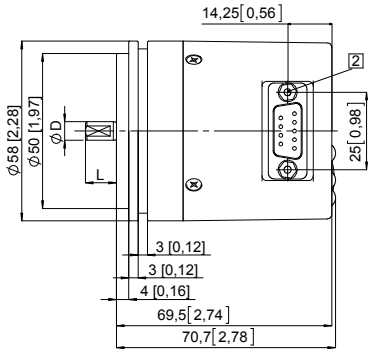

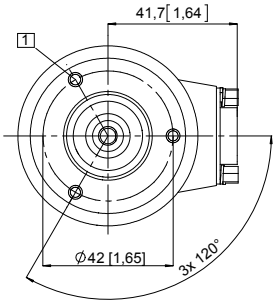

D	Fit	L
6 [0.24]	h7	10 [0.39]
10 [0.39]	f7	20 [0.79]
1/4"	h7	7/8"
3/8"	h7	7/8"

Square flange, □ 63.5 [2.5]
Flange type 5 and 7
(drawing with 2 x M23 connector)

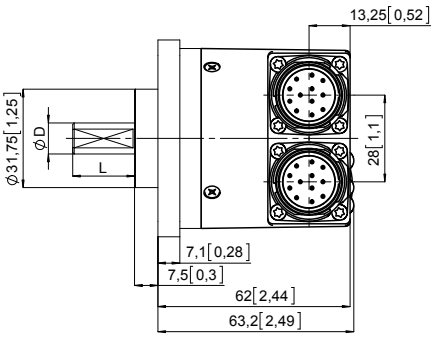

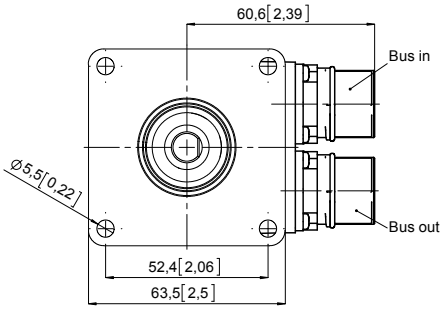

D	Fit	L
6 [0.24]	h7	10 [0.39]
10 [0.39]	f7	20 [0.79]
1/4"	h7	7/8"
3/8"	h7	7/8"

© Fritz Kübler GmbH, subject to errors and changes. 11/2023

Standard
mechanical multiturn, optical | **Sendix 5868 / 5888 (shaft / hollow shaft)** | **CANopen/CANopenLift**

Dimensions shaft version, with fixed connection

Dimensions in mm [inch]

Clamping flange, ø 58 [2.28]
Flange type 1 and 3
(drawing with 1 x M12 connector)

1 3 x M3, 6 [0.24] deep
2 3 x M4, 8 [0.32] deep

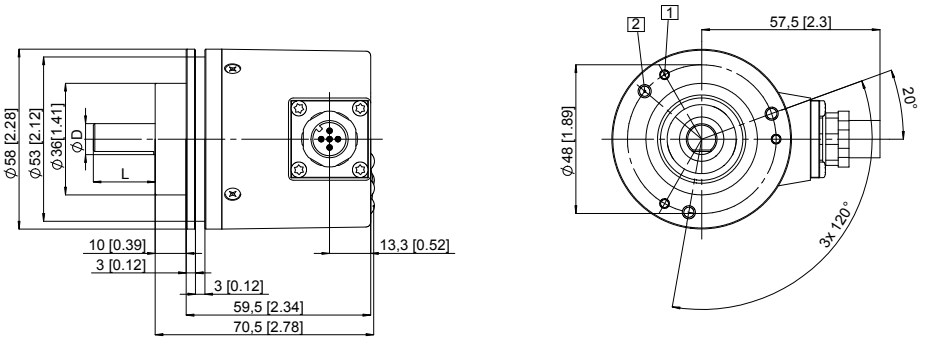

D	Fit	L
6 [0.24]	h7	10 [0.39]
10 [0.39]	f7	20 [0.79]
1/4“	h7	7/8“
3/8“	h7	7/8“

Synchro flange, ø 58 [2.28]
Flange type 2 and 4
(drawing with 2 x M12 connector)

1 3 x M4, 8 [0.32] deep

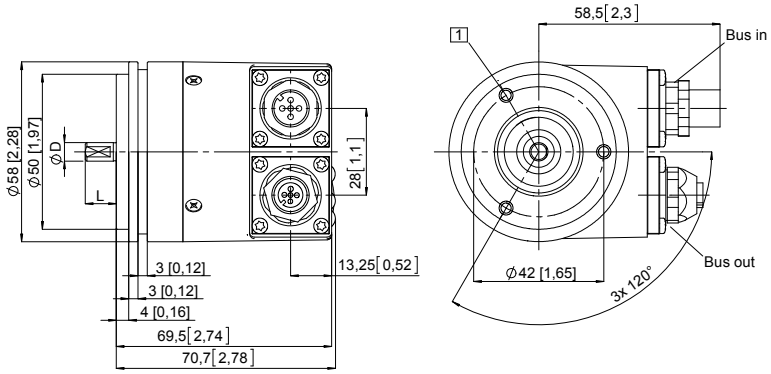

D	Fit	L
6 [0.24]	h7	10 [0.39]
10 [0.39]	f7	20 [0.79]
1/4“	h7	7/8“
3/8“	h7	7/8“

Clamping flange, ø 58 [2.28]
Flange type 1 and 3
(drawing with cable)

1 3 x M3, 6 [0.24] deep
2 3 x M4, 8 [0.32] deep

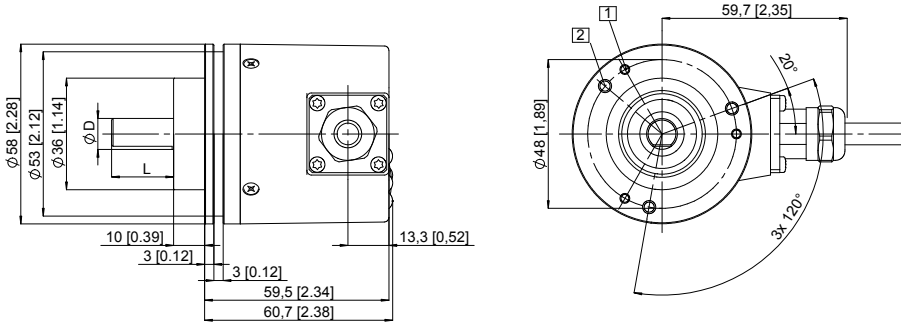

D	Fit	L
6 [0.24]	h7	10 [0.39]
10 [0.39]	f7	20 [0.79]
1/4“	h7	7/8“
3/8“	h7	7/8“

© Fritz Kübler GmbH, subject to errors and changes. 11/2023

Standard
mechanical multiturn, optical | **Sendix 5868 / 5888 (shaft / hollow shaft)** | **CANopen/CANopenLift**

Dimensions hollow shaft version (blind hollow shaft), with removable bus terminal cover

Dimensions in mm [inch]

Flange with spring element, long
Flange type 1 and 2
(drawing with 2 x M12 connector)

1 Slot spring element recommendation: torque pin DIN 7, ø 4 [0.16]
2 3 x M3, 5.5 [0.22] deep
3 Recommended torque for the clamping ring 0.6 Nm

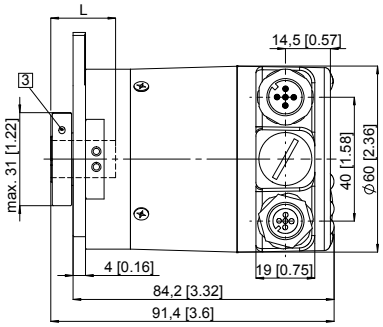

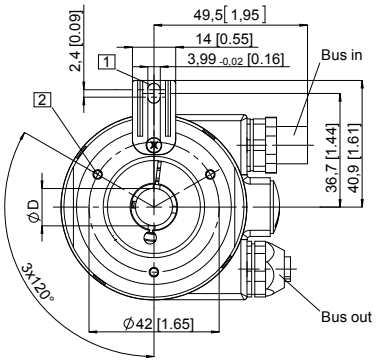

D	Fit	L
10 [0.39]	H7	30 [1.18]
12 [0.47]	H7	30 [1.18]
14 [0.55]	H7	30 [1.18]
15 [0.59]	H7	30 [1.18]
3/8"	H7	30 [1.18]
1/2"	H7	30 [1.18]
L = insertion depth max. blind hollow shaft		

Flange with stator coupling, ø 63 [2.48]
Flange type 5 and 6
Pitch circle diameter for fixing screws 63 [2.48]
(drawing with cable)

1 Recommended torque for the clamping ring 0.6 Nm

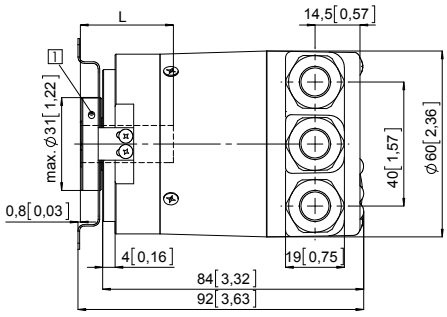

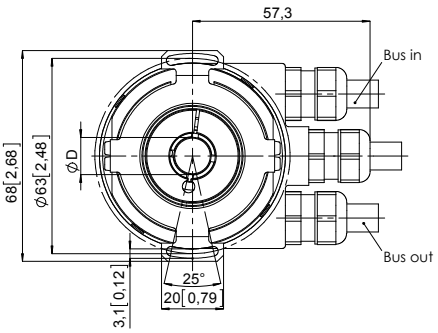

D	Fit	L
10 [0.39]	H7	30 [1.18]
12 [0.47]	H7	30 [1.18]
14 [0.55]	H7	30 [1.18]
15 [0.59]	H7	30 [1.18]
3/8"	H7	30 [1.18]
1/2"	H7	30 [1.18]
L = insertion depth max. blind hollow shaft		

Flange with stator coupling, ø 65 [2.56]
Flange type 3 and 4
Pitch circle diameter for fixing screws 65 [2.56]
(drawing with 2x M12 connector)

1 Recommended torque for the clamping ring 0.6 Nm

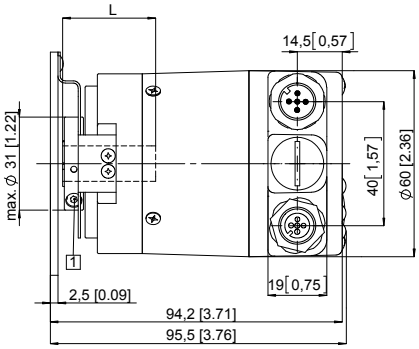

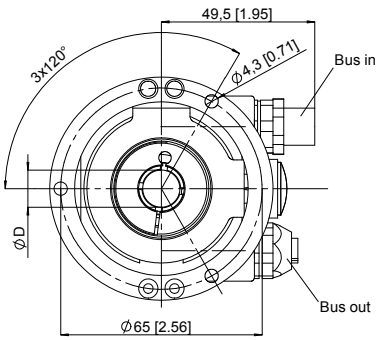

D	Fit	L
10 [0.39]	H7	30 [1.18]
12 [0.47]	H7	30 [1.18]
14 [0.55]	H7	30 [1.18]
15 [0.59]	H7	30 [1.18]
3/8"	H7	30 [1.18]
1/2"	H7	30 [1.18]
L = insertion depth max. blind hollow shaft		

© Fritz Kübler GmbH, subject to errors and changes. 11/2023

Standard
mechanical multiturn, optical | **Sendix 5868 / 5888 (shaft / hollow shaft)** | **CANopen/CANopenLift**

Dimensions hollow shaft version (blind hollow shaft), with fixed connection

Dimensions in mm [inch]

Flange with spring element, long
Flange type 1 and 2
(drawing with M23 connector)

1 Slot spring element recommendation: torque pin DIN 7, ø 4 [0.16]
2 3 x M3, 5.5 [0.22] deep
3 Recommended torque for the clamping ring 0.6 Nm

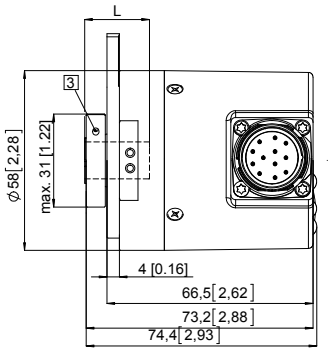

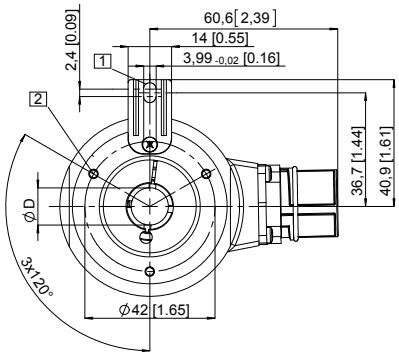

D	Fit	L
10 [0.39]	H7	30 [1.18]
12 [0.47]	H7	30 [1.18]
14 [0.55]	H7	30 [1.18]
15 [0.59]	H7	30 [1.18]
3/8"	H7	30 [1.18]
1/2"	H7	30 [1.18]
L = insertion depth max. blind hollow shaft		

Flange with spring element, long
Flange type 1 and 2
(drawing with Sub-D connector)

1 Slot spring element recommendation: torque pin DIN 7, ø 4 [0.16]
2 3 x M3, 5.5 [0.22] deep
3 2 x 4/40 UNC; 3.0 [0.12] deep
4 Recommended torque for the clamping ring 0.6 Nm

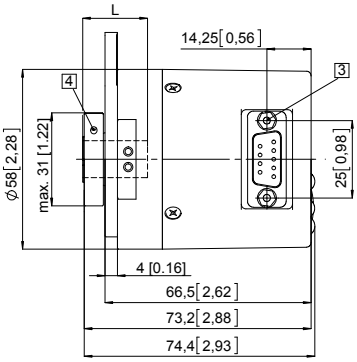

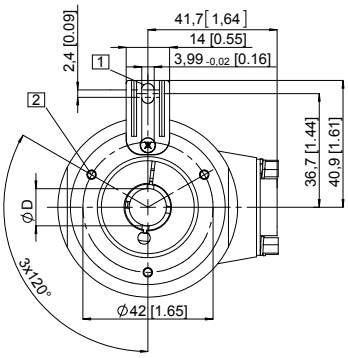

D	Fit	L
10 [0.39]	H7	30 [1.18]
12 [0.47]	H7	30 [1.18]
14 [0.55]	H7	30 [1.18]
15 [0.59]	H7	30 [1.18]
3/8"	H7	30 [1.18]
1/2"	H7	30 [1.18]
L = insertion depth max. blind hollow shaft		

Flange with stator coupling, ø 65 [2.56]
Flange type 3 and 4
Pitch circle diameter for fixing screws 65 [2.56]
(drawing with 2 x M23 connector)

1 Recommended torque for the clamping ring 0.6 Nm

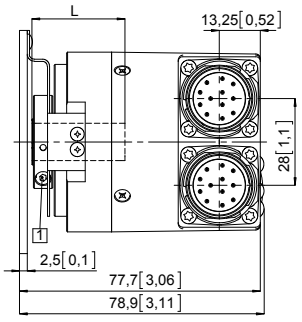

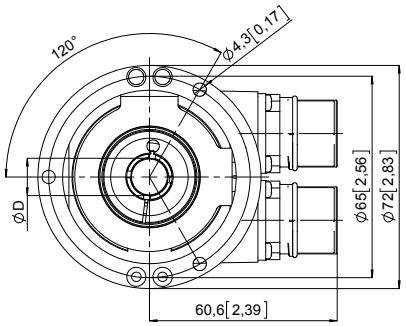

D	Fit	L
10 [0.39]	H7	30 [1.18]
12 [0.47]	H7	30 [1.18]
14 [0.55]	H7	30 [1.18]
15 [0.59]	H7	30 [1.18]
3/8"	H7	30 [1.18]
1/2"	H7	30 [1.18]
L = insertion depth max. blind hollow shaft		

© Fritz Kübler GmbH, subject to errors and changes. 11/2023

Standard
mechanical multiturn, optical | **Sendix 5868 / 5888 (shaft / hollow shaft)** | **CANopen/CANopenLift**

Dimensions hollow shaft version (blind hollow shaft), with fixed connection

Dimensions in mm [inch]

Flange with stator coupling, ø 63 [2.48]
Flange type 5 and 6
Pitch circle diameter for fixing screws
63 [2.48]
(drawing with M12 connector)

1 Recommended torque for the clamping ring 0.6 Nm

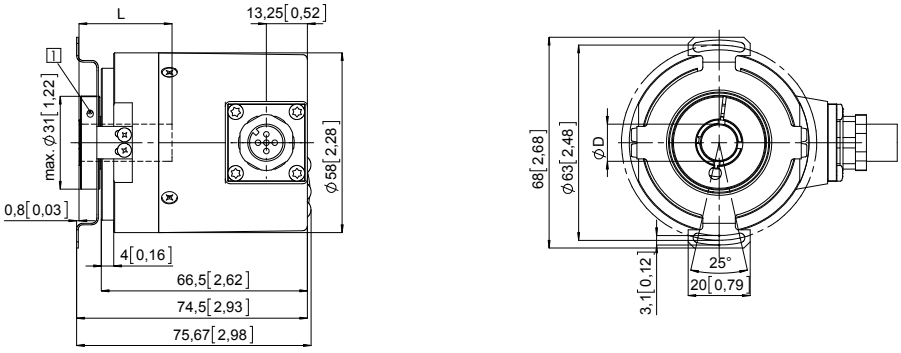

D	Fit	L
10 [0.39]	H7	30 [1.18]
12 [0.47]	H7	30 [1.18]
14 [0.55]	H7	30 [1.18]
15 [0.59]	H7	30 [1.18]
3/8"	H7	30 [1.18]
1/2"	H7	30 [1.18]
L = insertion depth max. blind hollow shaft		

Flange with spring element, long
Flange type 1 and 2
(drawing with 2 x M12 connector)

1 Slot spring element recommendation: torque pin DIN 7, ø 4 [0.16]
2 3 x M3, 5.5 [0.22] deep
3 Recommended torque for the clamping ring 0.6 Nm

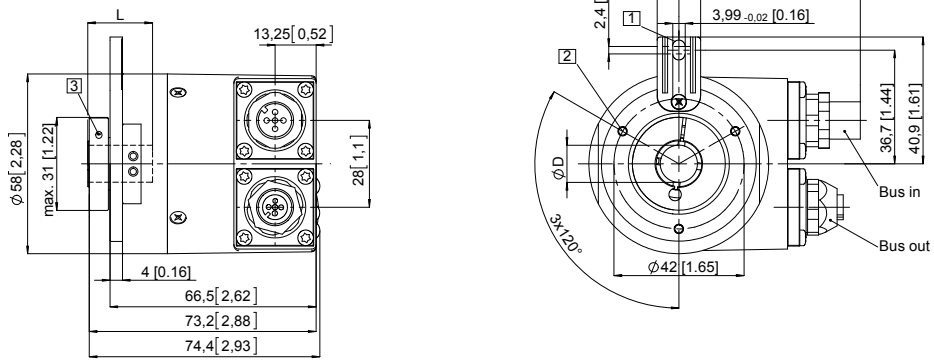

D	Fit	L
10 [0.39]	H7	30 [1.18]
12 [0.47]	H7	30 [1.18]
14 [0.55]	H7	30 [1.18]
15 [0.59]	H7	30 [1.18]
3/8"	H7	30 [1.18]
1/2"	H7	30 [1.18]
L = insertion depth max. blind hollow shaft		

Flange with stator coupling, ø 65 [2.56]
Flange type 3 and 4
Pitch circle diameter for fixing screws
65 [2.56]
(drawing with cable)

1 Recommended torque for the clamping ring 0.6 Nm

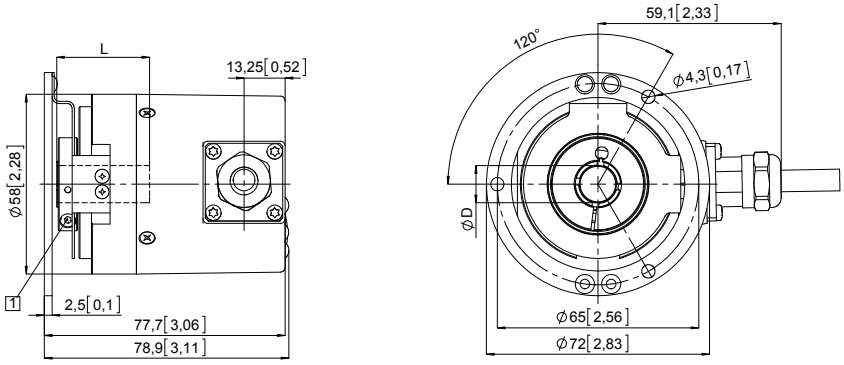

D	Fit	L
10 [0.39]	H7	30 [1.18]
12 [0.47]	H7	30 [1.18]
14 [0.55]	H7	30 [1.18]
15 [0.59]	H7	30 [1.18]
3/8"	H7	30 [1.18]
1/2"	H7	30 [1.18]
L = insertion depth max. blind hollow shaft		

© Fritz Kübler GmbH, subject to errors and changes. 11/2023