Product Data Sheet

9294310149
VUC0119YUJBS
4114 N/2X

ebmpapst
The engineer's choice



GREEN TECH

4114 N/2X

INDEX

1 General 3
2 Mechanics 3
2.1 General 3
2.2 Connections 3
3 Operating Data 4
3.1 Electrical Operating Data 4
3.2 Electrical Interface - Output 5
3.3 Electrical Features 6
3.4 Aerodynamics 7
3.5 Sound Data 8
4 Environment 8
4.1 General 8
4.2 Climatic Requirements 8
5 Safety 9
5.1 Electrical Safety 9
5.2 Approval Tests 9
6 Reliability 9
6.1 General 9

1 General

Fan type	Fan	
Rotating direction looking at rotor	Clockwise	
Airflow direction	Air intake over struts	
Bearing system	Ball bearing	
Mounting position - shaft	Any	

2 Mechanics

2.1 General

Width	119,0 mm	
Height	119,0 mm	
Depth	38,0 mm	
Mass	0,380 kg	
Housing material	Metal	
Impeller material	Plastic	
Max. torque when mounted across both mounting flanges Screw size	Wire outlet corner: 170 Ncm Remaining corners: 300 Ncm ISO 4762 - M3 degreased, without an additional brace and without washer	

2.2 Connections

Electrical connection	Wires	
Lead wire length Tolerance	L = 310 mm +- 10,0 mm	



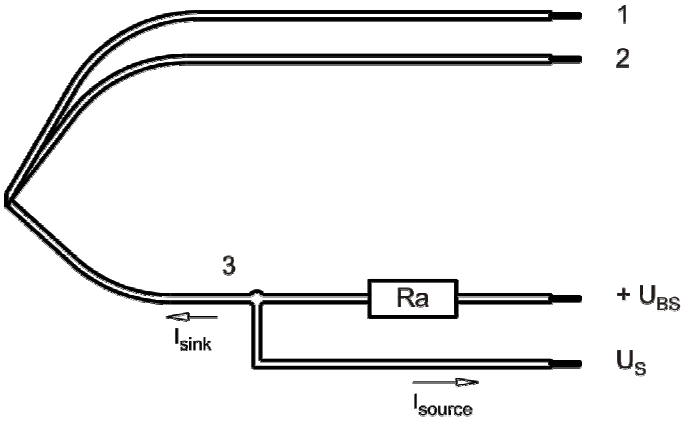

Wire	Color	Operation	Wire size	Insulation diameter
1	red	+ UB	AWG 22	1,7 mm
2	black	- GND	AWG 22	1,7 mm
3	yellow	Tacho	AWG 22	1,7 mm

The auxilliaries shown on the schematic diagram (which are required for the intended use) are not part of our delivery.

3 Operating Data

3.1 Electrical Operating Data

Measurement conditions: Normal air density = 1,2 kg/m3; Temperature 23℃ +/ - 3℃; Motor axis horizontal; warm-up time before measuring 5 minutes (unless otherwise specified). In the intake and outlet area should not be any solid obstruction within 0,5 m.

Δp = 0: corresp. to free air flow (see chapter aerodynamics)
I: corresp. to arithm. mean current value

Features	Condition	Symbol	Values		
Voltage range		U	12 V		31,5 V
Nominal voltage		U_N		24 V	
Power consumption Tolerance	Δp = 0 0010	P	1,2 W +- 17,5 %	4,9 W +- 12,5 %	8,6 W +- 15 %
Current consumption Tolerance	Δp = 0 0010	I	100 mA +- 17,5 %	205 mA +- 12,5 %	273 mA +- 15 %
Speed Tolerance	Δp = 0 0010	n	1.650 1/min +- 12,5 %	3.200 1/min +- 7,5 %	3.850 1/min +- 10 %
Starting current consumption				1.030 mA	

3.2 Electrical Interface - Output

Tacho type	/2 (open collector)

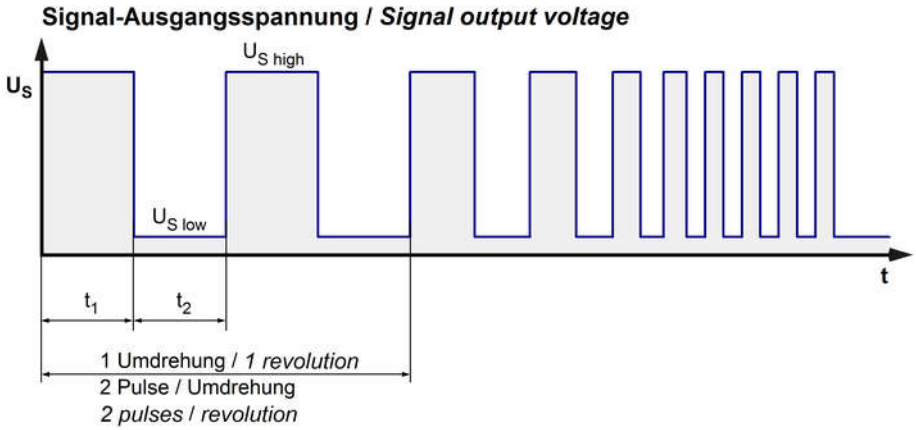

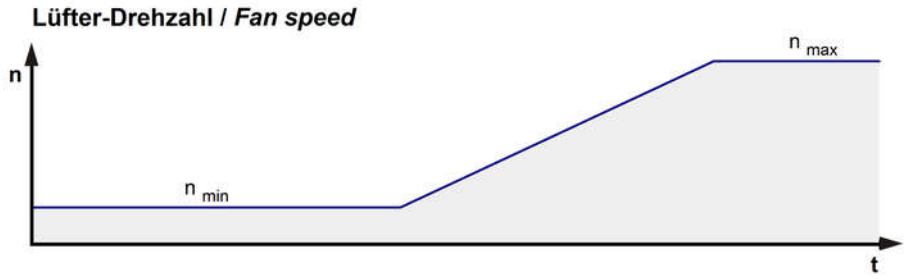

$$Ra = \frac{U_{BS} - U_{S\,low}}{I_{sink}}$$

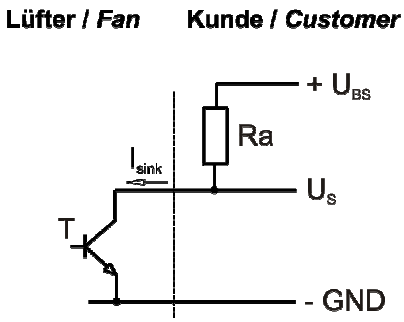

Features		Note	Values
Tacho operating voltage	U_{BS}		<= 30 V
Tacho signal Low	$U_{S\,low}$	I sink: 2 mA	<=0,3 V
Tacho signal High	$U_{S\,high}$	I source: 0 mA	<=30 V
Maximum sink current	I_{sink}		<= 4 mA
Maximum source current			0 mA
External resistor		External resistor Ra from UBS to US required. All voltages measured to GND.	
Tacho frequency		(2 x n) / 60	
Tacho isolated from motor		No	
Slew rate			=> 0,5 V/us

n = revolutions per minute (1/min)

3.3 Electrical Features

Electronic function	None	
Reversed polarity protection Max. residual current at U_N	Rectifying diode I_F <= 10 mA	
Locked rotor protection	Auto restart	
Locked rotor current at U_N	I_{block} approx. 1.030 mA	
Clock signal at locked rotor	t_3 / t_4 typical: 0,6 s / 10 s	

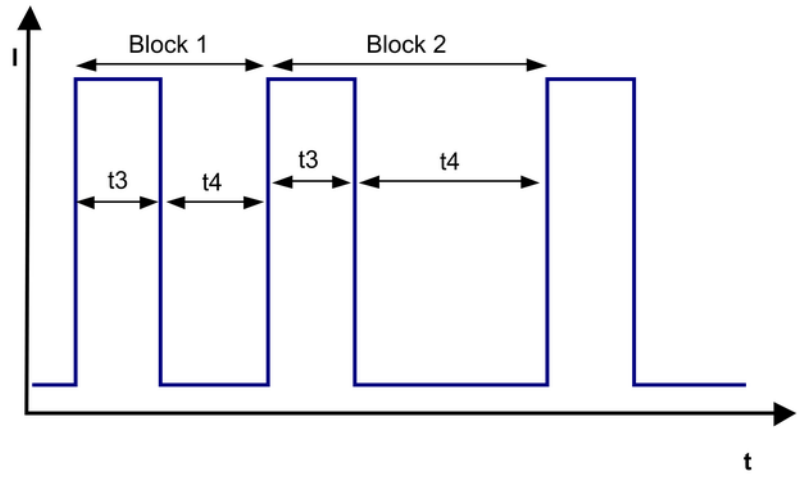

Block1: special locked rotor protection: 5 cycles t3 / t4 = 0,6 s / 1 s Block2: locked rotor protection t3 / t4 = 0,6 s / 10 s

3.4 Aerodynamics

Measurement conditions:	Measured with a double chamber intake rig acc. to DIN EN ISO 5801. Normal air density = 1,2 kg/m3; Temperature 23℃ +/ - 3℃; In the intake and outlet area should not be any solid obstruction within 0,5 m. Motor shaft horizontal. The information is only valid under the specified test conditions and may be changed by the installation conditions. If there are deviations from the standard test conditions, the characteristic values must be checked under the installed conditions.

a.) Operation condition:

3.200 1/min at free air flow

Max. free-air flow (Δp = 0 / V̇ = max.)	168,0 m3/h	
Max. static pressure (Δp = max. / V̇ =0)	100 Pa	

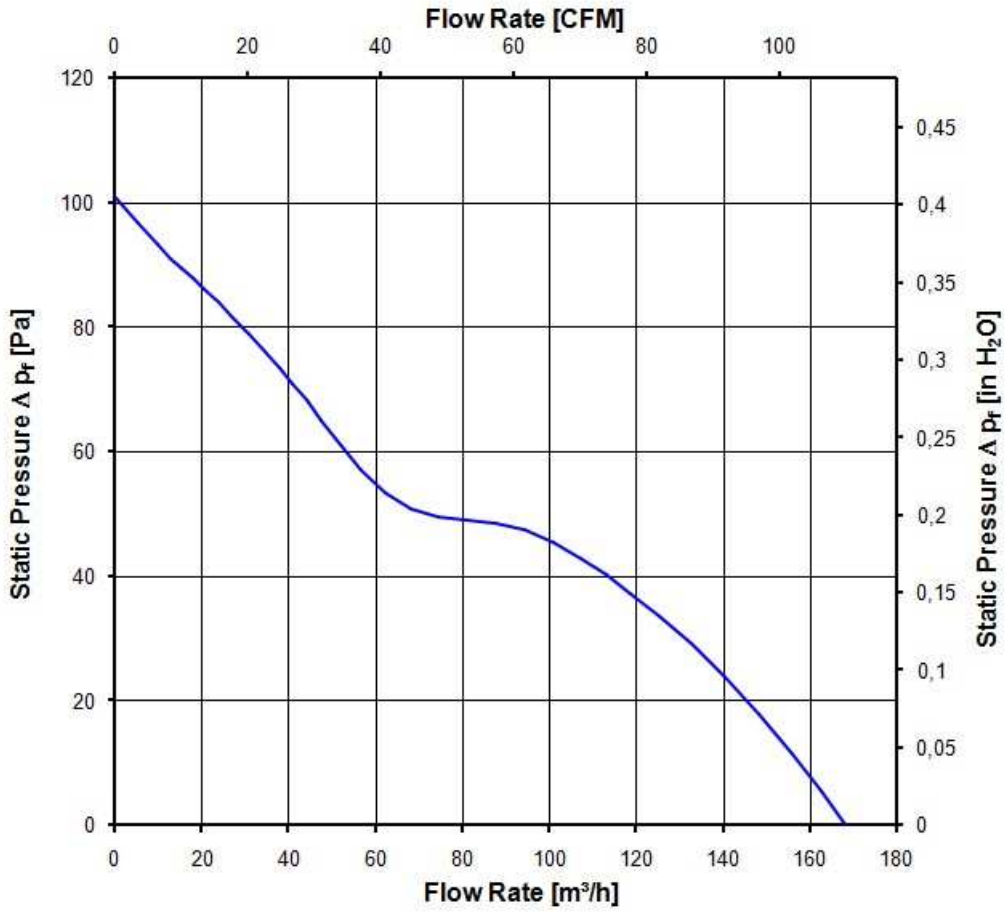

3.5 Sound Data

Measurement conditions:	Sound pressure level: 1 meter distance between microphone and the air intake. Sound power level: Acc. to DIN 45635 part 38 (ISO 10302) Measured in a semianchoic chamber with a background noise level of Lp(A) < 5 dB(A) For further measurement conditions see chapter aerodynamics.

a.) Operation condition:

3.200 1/min at free air flow

Optimal operating point	104,0 m3/h @ 40 Pa	
Sound power level at the optimal operating point	5,6 bel(A)	
Sound pressure level at free air flow, measured in rubber bands	49,0 dB(A)	

4 Environment

4.1 General

Min. permitted ambient temperature TU min.	-30 °C	
Max. permitted ambient temperature TU max.	75 °C	
Min. permitted storage temperature TL min.	-40 °C	
Max. permitted storage temperature TL max.	80 °C	

4.2 Climatic Requirements

Humidity requirements	humid heat, constant; according to DIN EN 60068-2-78, 14 days	
Water exposure	None	
Dust requirements	None	
Salt fog requirements	None	

Permitted application area:
The product is intended for use in sheltered rooms with controlled temperature and controlled humidity. Directly exposure to water must be avoided.

Pollution degree 1 (according DIN EN 60664-1)
There is either no pollution or it occurs only dry, non-conductive pollution. The pollution has no negative impact.

Please require severity levels and specification parameters from the responsible development departments.

5 Safety

5.1 Electrical Safety

Dielectric strength DIN EN 60950 (VDE 0805) and DIN EN 60335 (VDE 0700) A.) Type test Measuring conditions: After 48h of storage at 95% R.H. and 25℃. No arcing or breakdown is allowed! All connections together to ground. B.) Routine test Measuring conditions: At indoor climate. No arcing or breakdown is allowed! All connections together to ground.	500 VAC / 1 Min. 850 VDC / 1 Sec.	
Isolation resistance Measuring conditions: After 48h of storage at 95% R.H. and 25℃ measured with U=500 VDC for 1 min.	RI > 10 MOhm	
Clearance / creepage distance	1,0 mm / 1,2 mm	
Protection class	III	

5.2 Approval Tests

CE	EC Declaration of Conformity	Yes
EAC	Eurasian Conformity	Yes
UL	Underwriters Laboratories	Yes / UL507, Electric Fans E38324
VDE	Association for Electrical, Electronic and Information Technologies	Yes / Approval acc. to EN 60950 (VDE 0805) - Information technology equipment
CSA	Canadian Standards Association	Yes / C22.2 No. 113 Fans and Ventilators
CCC	China Compulsory Certification	Not applicable

6 Reliability

6.1 General

Life expectancy L10 at TU = 40 ℃	85.000 h	
Life expectancy L10 at TU max.	40.000 h	
Life expectancy L10 acc. to IPC 9591 at TU = 40 ℃	142. 500 h	

Copying of this document, and giving it to others and the use or communication of the contents thereof, are forbidden without express authority. Offenders are liable to the payment of damages. All rights are reserved in the event of the grant of a patent or the registration of a utility model or design.

Schutzvermerk nach DIN ISO 16016 beachten/
Refer to protection notice DIN ISO 16016!

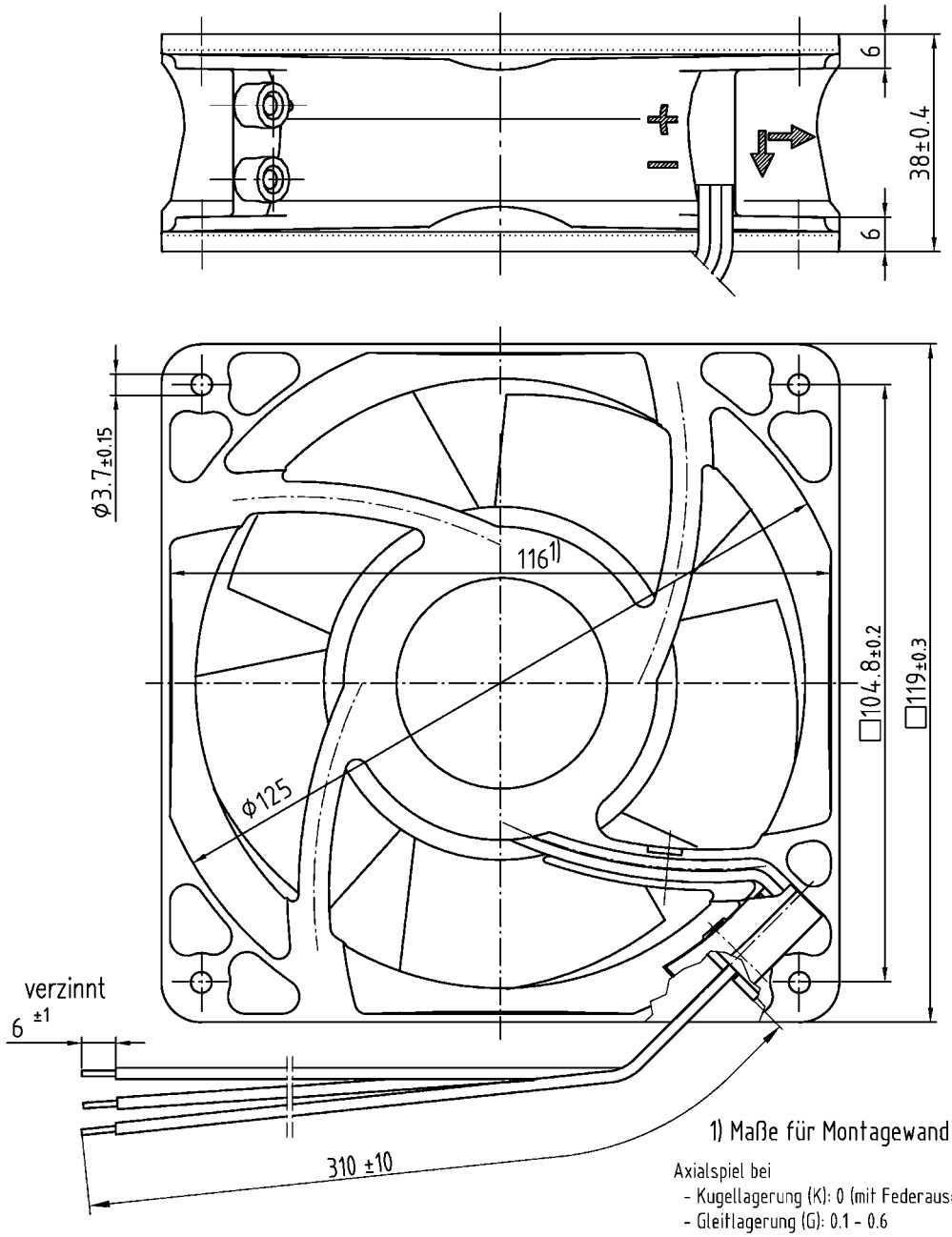

1) Maße für Montagewand

Axialspiel bei
- Kugellagerung (K): 0 (mit Federausgleich)
- Gleitlagerung (G): 0.1 - 0.6

Tolerierung/Tolerances: DIN 7167 Allgemeintoleranzen/ Gen. tolerances: DIN 7167 Längenmaße: Winkel, Form u. Lage: DIN ISO 2768-cL	gilt für: 929 4310 119(K) 4112 NXS 929 4310 498(K) 4114 N/2X 929 4310 154(K) 4112 N/12X 929 4310 166(K) 4114 N/12XH Ⓒ

	Datum/Date	Name/Name		
Bearb./Drawn:			Artikel/Title	Massstab/scale
	Index/Index	Aend.-Nr./Change-No.	Zchg.-Nr./ Dwg.-No.:	Blatt/Page
gepr. u. zur Verwendung freigegeben/Checked for release Von by Am on		ebm-papst St. Georgen GmbH & Co. KG	Ers.f.Zchg./ Replaces:	A4

12/03