Plastic bodied limit switch
Series TI2

Description **TI2-U1Z RIW**	Article number **6088117007**

Operating symbol

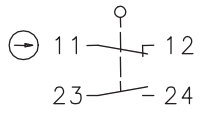

Fixed positioning with
e.g. fixing screw M5
according to the standard
DIN EN ISO 4762.

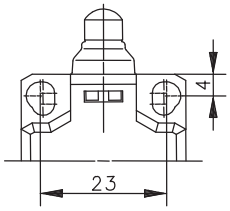

Operating diagram

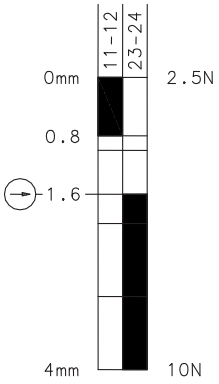

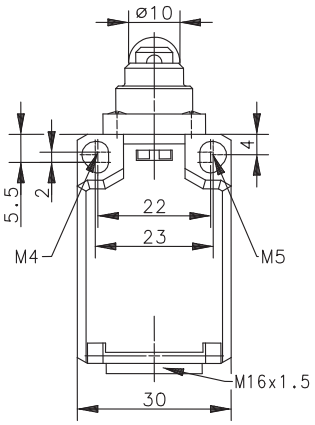

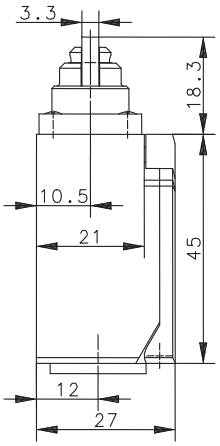

On Off

Tolerance:
Operating point ± 0,25 mm;
Actuating force ± 10 %

Electrical Data		
Rated insulation voltage	U_i	250 V AC
Conv. thermal current	I_{the}	10 A
Rated operational voltage	U_e	240 V
Utilization category		AC-15, U_e/I_e 240 V / 3 A
Direct opening action	⊖	acc. to IEC/EN 60947-5-1, Annex K
Short-circuit protective device		Fuse 6 A gG
Protection class		II, totally insulated

Mechanical data	
Enclosure	Thermoplastic, glass fibre reinforced (UL 94-V0)
Cover	Thermoplastic, glass fibre reinforced (UL 94-V0)
Actuator	Roller (thermoplastic)
Ambient air temperature	-30 °C ... +80 °C
Contact type	1 NC, 1 NO (Zb)
Mechanical life	3 x 10^6 operating cycles
Switching frequency	≤ 100 / min.
Assembly	2 x M4 or 2 x M5 fixed position for safety applications
Connection	4 screw connections (M3,5)
Conductor cross-sections	Solid: 0,5 ... 1,5 mm^2 or Litz wire with ferrules: 0,5 ... 1,5 mm^2
Cable entrance	1 x M16 x 1,5
Weight	≈ 0,05 kg
Installation position	operator definable
Protection type	IP65 acc. to EN 60529; DIN VDE 0470 T1

ID for safety engineering	
B10d	6 x 10^6 cycles

Actuation
The actuating device is preferably started from 2 sides.

Standards	
	VDE 0660 T100, DIN EN 60947-1, IEC 60947-1
	VDE 0660 T200, DIN EN 60947-5-1, IEC 60947-5-1
	DIN EN ISO 13849-1

EU Conformity	
	acc. to directive 2014/35/EU

Approvals	
	$_cCSA_{US}$, A300, Q300 (same polarity)
	UL
	CCC

Notes
The degree of protection (IP code) specified applies solely to a property closed cover and the use of an equivalent cable gland with adequate cable.