ME070FD024

ELECTRONIC DIRECT-ON-LINE STARTER, 7A, INTEGRATED MOTOR THERMAL PROTECTION, OPERATIONAL VOLTAGE UE ≤500VAC, AUXILIARY AND CONTROL SUPPLY VOLTAGE 24VDC



Electrical features			
Function			Direct-On-Line starter
Rated operational voltage		V	40...500
Rated frequency		Hz	50/60
Auxiliary supply voltage			24VDC
Rated current AC-3, AC-53a		A	7
Power dissipation		W	1.2...15.2
Thermal protection			Integrated, class 10A
Thermal trip adjustment range			1.5…7A
Safe torque Off (STO) safety function			No
Digital outputs			
Number of outputs		Nr.	2
Output type			1 relay output with C/O contact +1 PNP digital output
Output contacts ratings			Relay output: 3A 230V AC15, 2A 24V DC13 Digital output: 40mA 24VDC
Mechanical features			
Terminals type			Screw
Conductor section			
	AWG/kcmil conductor section		
	min		24
	max		14
	IEC		
	min	mm²	0.2
	max	mm²	2.5
	Tightening torque for terminals max	Nm	0.6
Cable stripping lenght		mm	8
Operating position			
	normal		Vertical
Fixing			35mm DIN rail (IEC/EN/BS 60715)
Weight		g	300
Operations			
Mechanical life		cycles	15 milion
Electrical life		cycles	50 milion
Ambient conditions			
Operating temperature			
	min	°C	-25

The characteristics described in this document are subject to updates or modifications at any time. The descriptions, technical and functional information, illustrations and instructions in this brochure are purely illustrative, and are consequently not contractually binding

	max	°C	+70
Storage temperature			
	min	°C	-25
	max	°C	+80
Relative humidity		%	20...90

Resistance & Protection

Rated insulation voltage Ui		V	500
Rated surge voltage		kV	6
Frontal IP degree			IP20
Terminals IP degree			IP20
Pollution degree			2

Dimensions

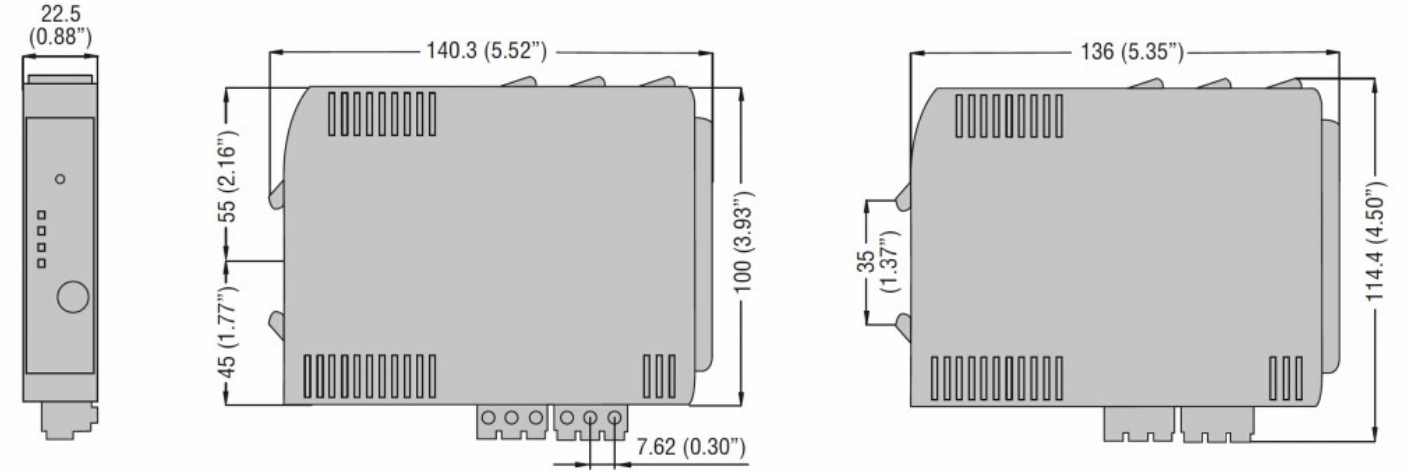

Wiring diagrams

The characteristics described in this document are subject to updates or modifications at any time. The descriptions, technical and functional information, illustrations and instructions in this brochure are purely illustrative, and are consequently not contractually binding

Wiring diagram for three-phase motors

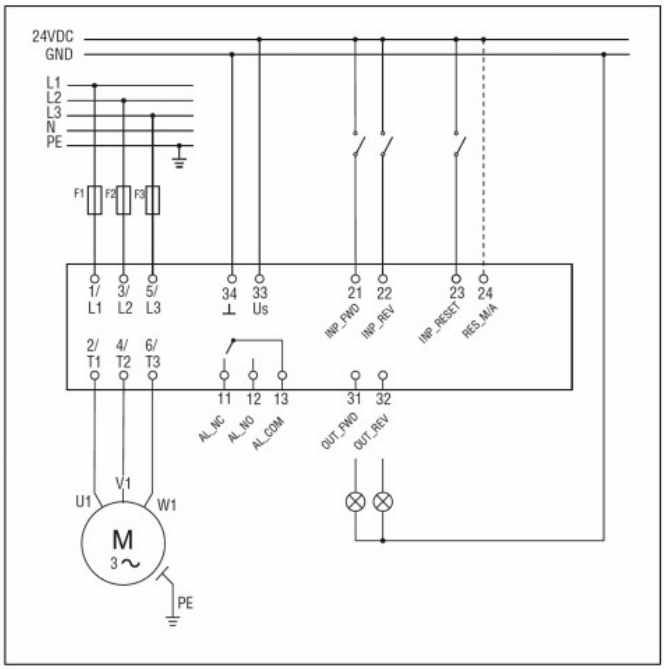

Wiring diagram for single-phase motors

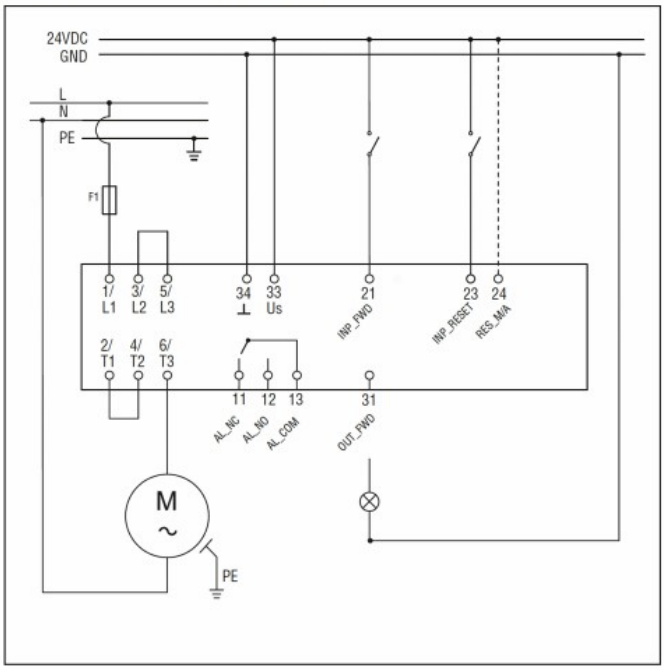

Wiring diagram for three-phase motors for safety applications

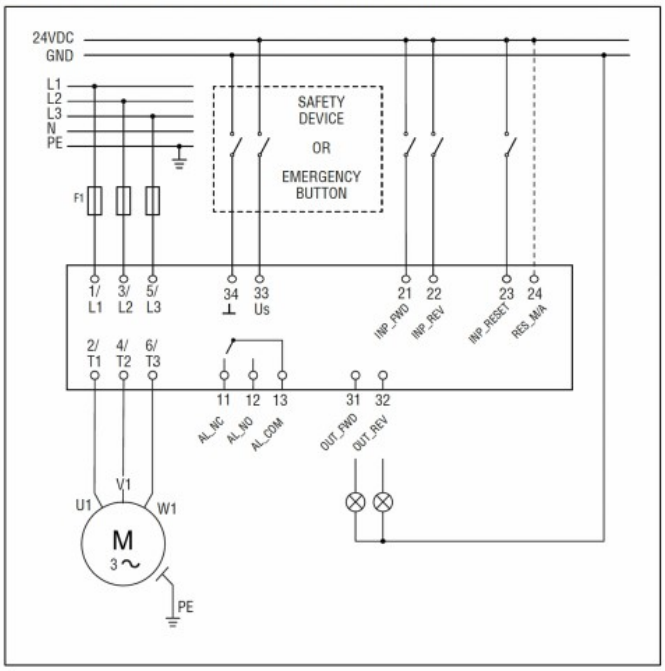

Wiring diagram for single-phase motors for safety applications

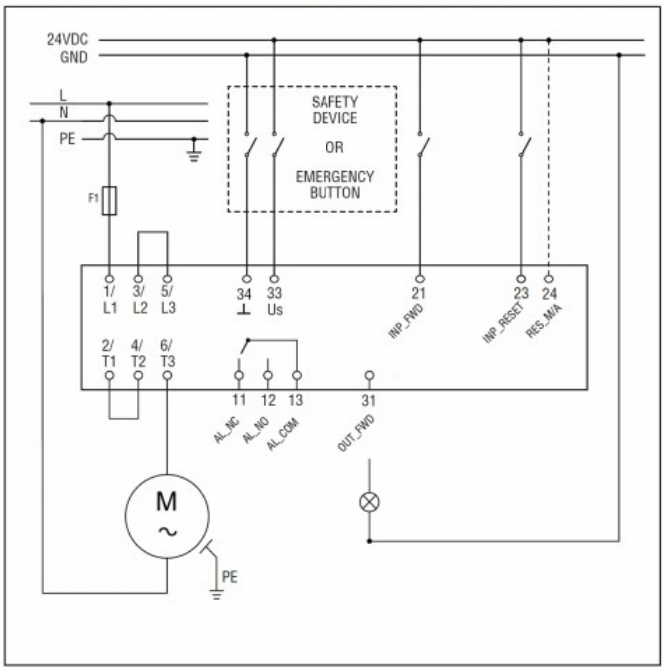

Certifications and compliance

Compliance

	CSA C22.2 n° 60947-4-2
	IEC/EN/BS 609474-2
	UL 60947-4-2

Certificates

	cULus

ETIM classification

ETIM 8.0	EC001037 - Motor starter / Motor starter combination

The characteristics described in this document are subject to updates or modifications at any time. The descriptions, technical and functional information, illustrations and instructions in this brochure are purely illustrative, and are consequently not contractually binding