Type: LEYD/A

Star/Delta Start Timer

Terminal Protection to IP20



Dims: to DIN 43880
W. 17.5mm

- ***NEW*** **17.5mm DIN rail housing**
- **Star/Delta timing function**
- **7 Selectable Dwell time settings (40 – 160mS)**
- **7 Selectable time ranges (0.1 seconds – 100 hours)**
- **Fine adjustment of selected time range**
- **Multi-voltage input (12 – 230V AC/DC)**
- **1 x SPDT relay output 8A**
- **Green LED indication for supply / timing status**
- **Red LED indication for relay status**
- **Conforms to IEC 61812**

ISO 9001:2015
Cert. No. 14125771

FUNCTION DIAGRAM

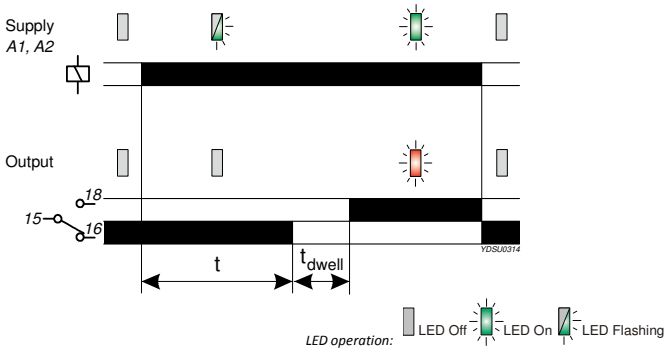

INSTALLATION AND SETTING

Installation work must be carried out by qualified personnel.

- BEFORE INSTALLATION, ISOLATE THE SUPPLY.
- Connect the unit as required.

Setting the unit.

- Set the "Dwell (ms)" selector ❺ to the required position.
- Set the "Range" ❹ to the required position (depending on whether seconds, minutes or hours are required), then set the "Set %" adjustment ❸ as required. The "Set %" is a % of the selected range, so 60% of the 1 – 10 hour range will give 6 hours.

Applying power.

- Apply power and the green LED ❶ will start flashing to indicate timing is in progress. Contacts 15 and 16 will remain closed during this period.
- At the end of the delay period "t", contacts 15 and 16 will open for the period set by the Dwell time.
- After the Dwell time, contacts 15 and 18 will close and the red relay LED ❷ will illuminate to indicate the relay is in the energised state.
- The relay will remain in the energised state until power is removed. Re-applying power will repeat the whole process again.

Note:

[1] In accordance with IEC 61812, the green LED is permitted to extinguish during a voltage dip or momentary interruption of the power supply providing the state of the output relay does not change. The dip / interruption duration and levels are defined in the product standard.

[2] The dip / interruption (reset) duration and levels are defined in the product standard however, the standard allows for these to be different from the levels actually specified.

TECHNICAL SPECIFICATION

Supply voltage U **(A1, A2)**:	12 – 230V AC/DC			
Frequency range:	48 - 63Hz (AC supplies)			
Supply variation:	AC: +15/-10% DC: +/-15%			
Overvoltage category:	III (IEC 60664)			
Rated impulse withstand voltage:	4kV (1.2/50µS) IEC 60664			
Power consumption (max.):	12V	24V	110V	230V
AC:	0.6VA	0.8VA	2.6VA	6.8VA
DC:	0.52W	0.48W	0.94W	1.9W
Timing function:	Star/Delta Start			
Selectable Dwell (t_{dwell}) time settings (7):	40, 60, 80, 100, 120, 140, 160ms			
Timing ranges (7):	Seconds:	Minutes:	Hours:	
	0.1 – 1	0.1 – 1	0.1 – 1	
	1 – 10	1 – 10	1 – 10	
			10 - 100	
Reset time[2]:	< 100mS			
Accuracy:	± 1% of maximum full scale			
Adjustment accuracy:	< 5% of maximum full scale			
Repeat accuracy:	± 0.5% at constant conditions (IEC 61812)			
Drift with temperature:	± 0.05% / °C			
Drift with voltage:	± 0.2% / V			
Power on indication / Timing[1]:	Green LED			
Relay status	Red LED			
Ambient temp:	-20 to +60°C			
Relative humidity:	+95%			
Output **(15, 16, 18)**:	SPDT relay			
Output rating:	AC1		250V 6A (1500VA)	
	DC1		30V 6A (180W)	
Electrical life:	≥ 150,000 ops at rated load			
Dielectric voltage:	2kV AC (rms) IEC 60947-1			
Rated impulse withstand voltage:	4kV (1.2/50µS) IEC 60664			
Housing:	Orange flame retardant UL94			
Weight:	≈ 70g			
Mounting option:	On to 35mm symmetric DIN rail to BS EN 60715 or direct surface mounting via 2 x M3.5 or 4BA screws using the black clips provided on the rear of the unit.			
Terminal conductor size	≤ 2 x 2.5mm² solid or stranded			
Approvals:	Conforms to IEC 61812.			

c UL us LISTED IND. CONT. EQ. E111187

CE, C-tick and RoHS Compliant.
EMC: Immunity: EN 61000-6-2 (EN 61000-4-3 10V/m 80MHz - 2.7GHz)
Emissions: EN 61000-6-4

CONNECTION DIAGRAM

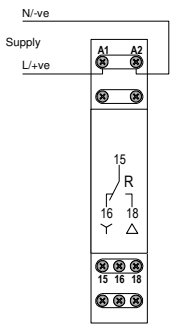

SETTING DETAILS

1. Power supply status / Timing (Green) LED
2. Relay output status (Red) LED
3. "Set %" adjustment selector
4. Time delay "Range" selector
5. "Dwell" time adjustment

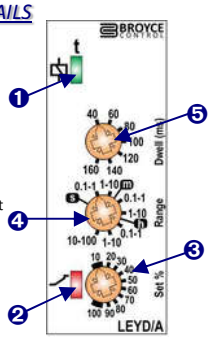

DIMENSIONS

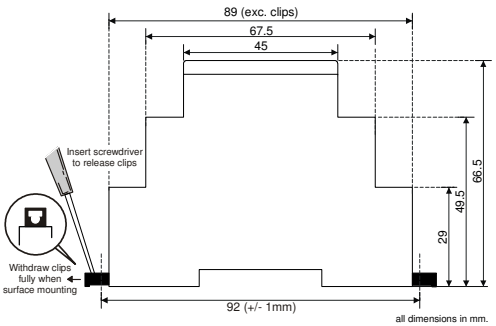

Broyce Control Ltd., Pool Street, Wolverhampton, West Midlands WV2 4HN. England
Tel: +44 (0) 1902 773746 Fax: +44 (0) 1902 420639 Email: sales@broycecontrol.com Web: www.broycecontrol.com

The Information provided in this literature is believed to be accurate (subject to change without prior notice); however, use of such information shall be entirely at the user's own risk.