MURR ELEKTRONIK
stay connected

Emparro IP67 Power Supply 1-Phase

OUT: 24VDC 10A - M12L 5P - SELV

Emparro®67 Hybrid
2× MICO M12 IOL
M12 (female) 5-pole, L-coded
Current: 10 A
INPUT: 90...265 V AC/90...265 V DC
OUTPUT: 24...28 V DC
Preventive Diagnostic
Over current protection device
controllable via IO-Link

Link to Product

Illustration



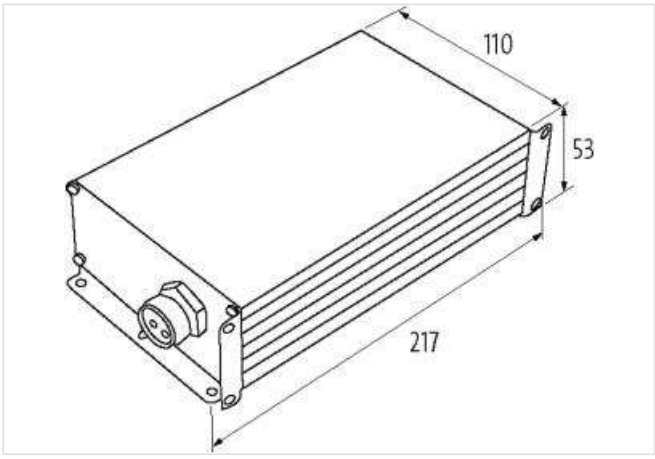

Product may differ from Image

Commercial data

ECLASS-6.0	27049002
ECLASS-6.1	27049002
ECLASS-7.0	27049002
ECLASS-8.0	27049002
ECLASS-9.0	27040701
ECLASS-10.1	27040701
ECLASS-11.1	27040701
ECLASS-12.0	27040701
ETIM-5.0	EC002540
customs tariff number	85044095
GTIN	4048879798433
Packaging unit	1

Electrical data

Parallel connection	no
Series connection	no
Security level	SELV

The information in this Product-PDF has been compiled with the utmost care.
Liability for the correctness completeness and topicality of the information is restricted to gross negligence. Version: 2024-02-02

MURR ELEKTRONIK
stay connected

Electrical data | Supply	
Power frequency	50 ... 60 Hz
Electrical data | Input	
Fuse protection primary side internal	6,3 A
Characteristic back-up fuse	Inertia
Input voltage AC	240 V
Input voltage AC min.	90 V
Input voltage AC max.	265 V
Input voltage DC min.	90 V
Input voltage DC max.	265 V
Current input AC	1,2 A
Inrush current max.	5,9 A @ 230 V
Efficiency	91,6 % @ 115 V AC, 92,8 % @ 230 V AC
Electrical data | Output	
Number of output channels	2
Output voltage DC	24 V
Output voltage DC min.	24 V
Output voltage DC max.	28 V
Output voltage adjustable	yes
Output current per channel max.	8 A
Output current max.	10 A
Min. mains failure bridging	20 ms @ 230 V AC
Ripple effective max.	10 mV
Spikes (s-s) max.	150 mV
Device protection | Electrical	
Degree of protection (EN IEC 60529)	IP67
Short-circuit protection output	yes
Overload protection output	yes
Overtemperature protection output	yes
Mechanical data | Mounting data	
Suitable for mounting type	6 hole screw mounting
Height	216 mm
Width	110 mm
Depth	53 mm
Environmental characteristics | Climatic	
Operating temperature min.	-25 °C
Operating temperature max.	80 °C
Derating from	50 °C
Storage temperature min.	-25 °C
Storage temperature max.	85 °C
Relative humidity min. (operation)	4 %
Relative humidity max. (operation)	100 %
Technical Data | Reliability	
MTBF	430000 h
Conformities, approvals	
Product standard	IEC 61010-2-201
EMC	EN 55022 B, EN 61000-3-2
Low Voltage Directive	EN 61204-3
Connection type 2	
Connection type 1	Output

The information in this Product-PDF has been compiled with the utmost care.
Liability for the correctness completeness and topicality of the information is restricted to gross negligence. Version: 2024-02-02

Connection type 2	Signal
Family construction form	M12
Gender	female
Color contact carrier	black
Coding	L
No. of poles	5
PIN 1	24 V DC (Out 1)
PIN 2	0 V (Out 2)
PIN 3	0 V (Out 1)
PIN 4	24 V DC (Out 2)
PIN 5	PE
Family construction form	M12
Gender	male
Color contact carrier	black
Coding	A
No. of poles	4
PIN 1	L + (24 V DC) (In)
PIN 2	DI / DO (I / Q)
PIN 3	L - (0 V)
PIN 4	IO-Link (C / Q)

The information in this Product-PDF has been compiled with the utmost care.
Liability for the correctness completeness and topicality of the information is restricted to gross negligence. Version: 2024-02-02