# EVF693

## Y connection cable

YDSGHDA0VAS0001PDASTGH030VAS

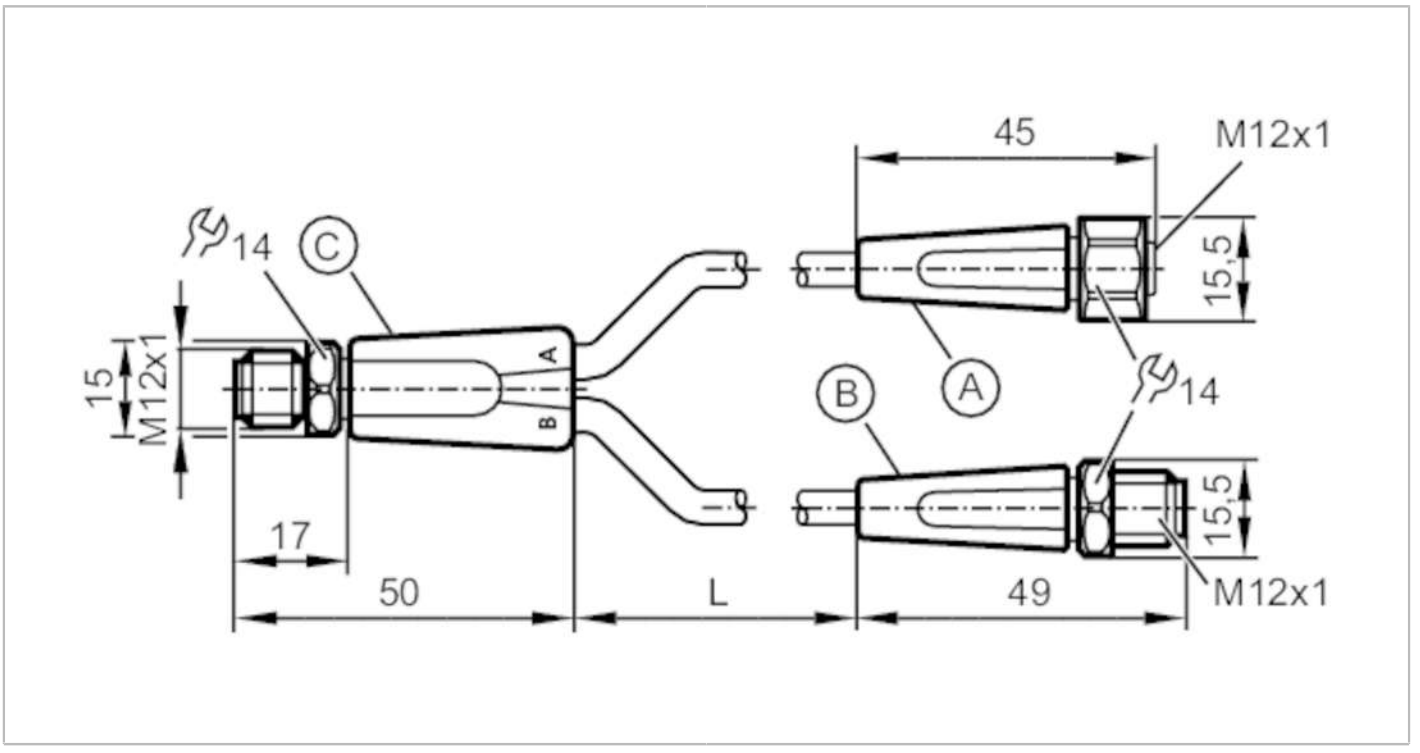


| | | |
|---|---|---|
| **Application** | | |
| Special feature | | Free from silicone; Halogen-free; Gold-plated contacts; Drag chain suitability |
| Application | | hygienic and wet areas in the food industry |
| Free from silicone | | yes |
| **Electrical data** | | |
| Operating voltage | [V] | < 24 DC |
| Protection class | | III |
| Max. current load total | [A] | 4 |
| **Operating conditions** | | |
| Ambient temperature | [°C] | -25...100 |
| Protection | | IP 65; IP 67; IP 68; IP 69K |
| **Mechanical data** | | |
| Weight | [g] | 100.8 |
| Moulded-body material | | PP |
| Material nut | | stainless steel (1.4404 / 316L) |
| Sealing material | | EPDM |
| Number of ports splitter box | | 2 |
| Drag chain suitability | | yes |
| Drag chain suitability | bending radius for flexible use | min. 10 x cable diameter |
| | travel speed | max. 3.3 m/s for a horizontal travel length of 5 m and max. acceleration of 5 m/s² |
| | bending cycles | > 5 Mio. |
| | torsional strain | ± 180 °/m |

# EVF693

## Y connection cable

YDSGHDA0VAS0001PDASTGH030VAS

| Remarks | |
|---|---|
| Pack quantity | 1 pcs. |

**Electrical connection**

Cable: 1 m, MPPE, Halogen-free, grey, Ø 5.1 mm; 2 x 0.34 mm² (42 x Ø 0.1 mm ) + 5 x 0.34 mm² (42 x Ø 0.1 mm )

**Electrical connection - plug C**

Connector: 1 x M12, straight; coding: A; Moulded body: PP, grey; Locking: stainless steel (1.4404 / 316L); Contacts: gold-plated; Tightening torque: 0.6...1.2 Nm

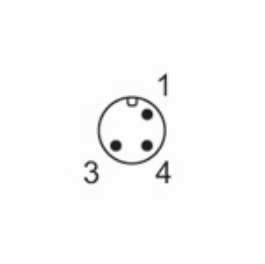


**Electrical connection - socket A**

Connector: 1 x M12, straight; coding: A; Moulded body: PP, grey; Locking: stainless steel (1.4404 / 316L); Sealing: EPDM; Contacts: gold-plated; Tightening torque: 0.6...1.5 Nm




**Electrical connection - plug B**

Connector: 1 x M12, straight; coding: A; Moulded body: PP, grey; Locking: stainless steel (1.4404 / 316L); Contacts: gold-plated; Tightening torque: 0.6...1.5 Nm



# EVF693

## Y connection cable

YDSGHDA0VAS0001PDASTGH030VAS

## Electrical connection - Connection

### Connection

