128, av. du Maréchal-de-Lattre-de-Tassigny - 87045 LIMOGES Cedex
Tel : 0 (+33) 5 55 06 87 87 Fax : 0 (+33) 5 55 06 88 88
www.legrand.com

Socket outlet

Cat. Nos : 0 042 80/82/83/85

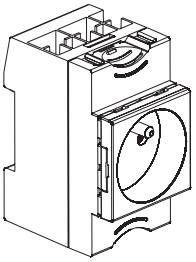
0 042 80

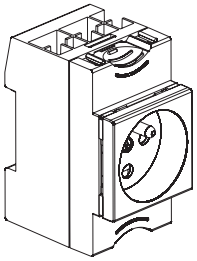
0 042 82

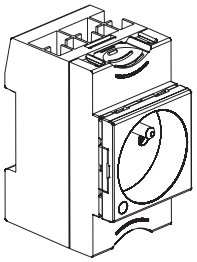
0 042 83

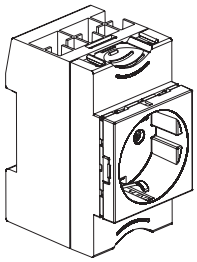
0 042 85

CONTENTS **Page**

1. Range 1
2. Dimensions 1
3. Technical characteristics 1
4. Installation 1
5. Cleaning 2
6. Conformity 2

1. RANGE

10/16 A - 250V~
Reference 0 042 80 : socket outlet 2P + E shuttered
Reference 0 042 82 : socket outlet 2P+ E shuttered and tamperproof for emergency or specialized circuits
Reference 0 042 83 : socket outlet 2P + E shuttered with indicator light
Reference 0 042 85 : socket outlet 2P + E german standard

2. DIMENSIONS

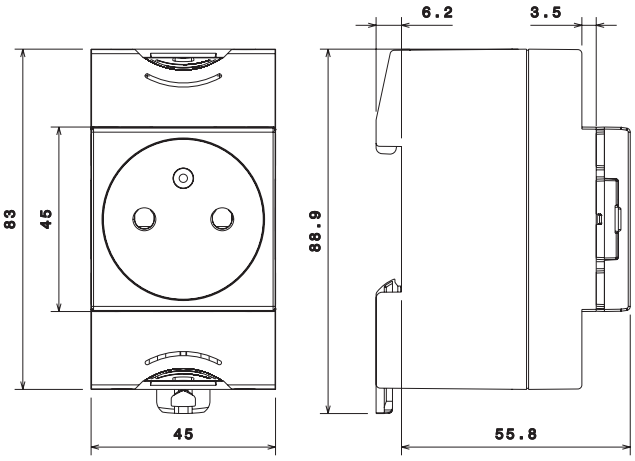

3. TECHNICAL CHARACTERISTICS

- Thermal current : 10/16 A
- Rated voltage : 250 V~
- Dielectric strength : 2 kV~
- Climatic characteristics
  Storage temperature : -10°C à +70°C
  Operating temperature : -5°C à +35°C
- Protection index : IK05
- Direct contact protection : IP2X
- Self-extinguishing : 750°C / 30s
- Materials :
  Cover and box : Polystyrene
  Outlet : Polycarbonate
- Color : grey RAL 7035

4. INSTALLATION

4.1 Connection

References 0 042 80/83/85

Automatic connection terminals

Terminal capacity :

Flexible wire without ferrule and solid wire : 2 x 1,5mm² min à 2 x 2,5mm² max

Stripping length : 12 mm

Allow insertion of supply busbars

Reference 0 042 82

Mixed pozidrive screw cage terminal blocks, disengageable and captive.

Allow insertion of supply busbars

Recommended connection cross-sections :

Flexible with ferrule	1,5 to 6 mm²
Solid	1,5 to 10 mm²

Required tools :

Flat blade screwdriver	Ø4 to 5,5 mm
Crosshead screwdriver	PZ1

Thigtening torque :

Min	0,8 Nm
Max	1,8 Nm
Recommended	1,2 Nm

4.2 Fixing

On symetrical rail DIN 35

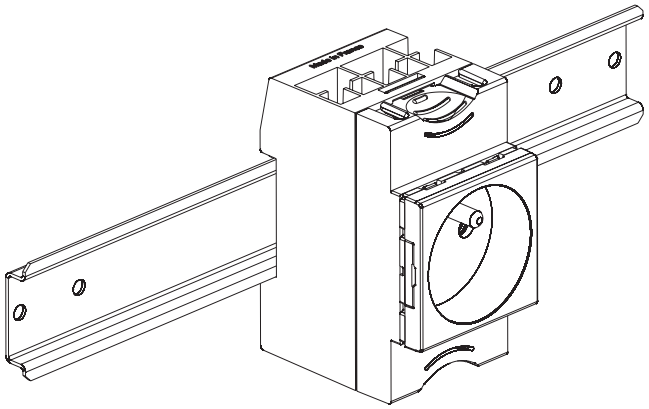

4.3 Operating position

Vertical, horizontal, upside down, flat

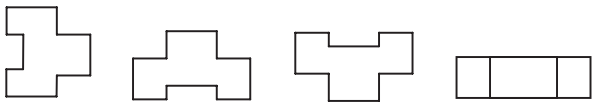

5. CLEANING

Surface cleaning with a cloth

Do not use : acetone, degreaser, trichloroethylene

6. CONFORMITY

6.1 Standards

IEC 60884-1

NF C 61-314

6.2 Plasctic materiels

Plastic materials halogen-free

6.3 Environment respect

Compliance with European Union Directives

Compliance with Directive 2011/65/EC of 08/06/2011 known as « RoHS II ».

Compliance with the Directive 91/338/EEC of 18/06/91 and decree 94-647 of 27/07/04.

6.4 Packaging

Design and manufacture of packaging in accordance with decree 98-638 of 27/07/1998 and directive 94/62/CE.