Accessories - Timers

- Power modules
- Front cover for GAMMA series
- Mounting plate
- Remote potentiometer RONDO R2





Powermodules - TR series and switching power supply - SNT series

Technical data

1. Function
Plug-in power modul for transforming the supply voltage of timers to internal operating voltage.

2. Mechanical Design
Sealed self-extinguishing plastic housing, IP-rating IP40 (if mounted).
Installation by plugging into the side mounting whole of the Timer.

3. Electrical data and types
Galvanic separated transformer module between input and output circuit.

Supply voltage:	see table
Tolerance:	see table
Rated frequency:	50/60Hz
Duration of operation:	100%

input voltage	type	P_{in}	P_{out}	tolerance
12V AC	TR2 - 12V AC	2VA	0.5VA	10,2 - 13,2V
24V AC	TR2 - 24V AC	2VA	0.5VA	20,2 - 26,4V
24V DC	SNT2 - 24V DC			20,4 - 26,4V
42V AC	TR2 - 42V AC	2VA	0.5VA	36 - 46V
48V AC	TR2 - 48V AC	2VA	0.5VA	41 - 53V
110V AC	TR2 - 110V AC	2VA	0.5VA	94 - 121V
127V AC	TR2 - 127V AC	2VA	0.5VA	108 - 140V
230V AC	TR2 - 230V AC	2VA	0.5VA	195 - 264V
400V AC	TR2 - 400V AC	2VA	0.5VA	340 - 456V

4. Ambient conditions

Ambient temperature:	-25 to +55°C
Storage temperature:	-25 to +70°C
Transport temperature:	-25 to +70°C
Relative humidity:	15% to 85%

5. Mounting
For mounting the module first the protective cup has to be removed. Then the module can be concisely plugged into the mounting whole of the TELE timer.

5. Mounting

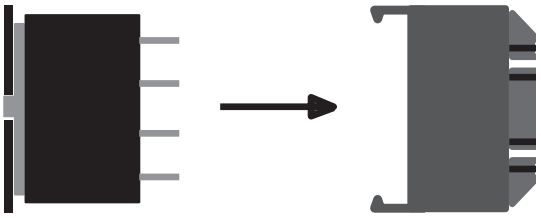

6. Dimensions

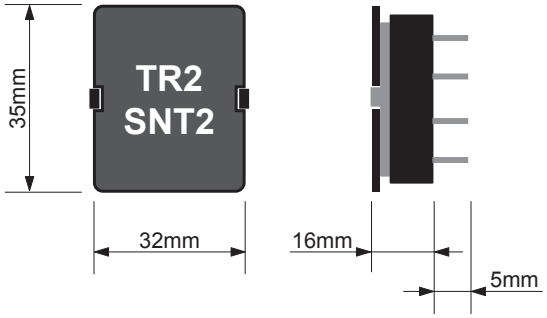

Front cover for GAMMA series

Technical data

1. Function
Sealable front cover for GAMMA timers.

2. Mechanical Design
Self-extinguishing plastic cover with sealable snap.

3. Dimensions

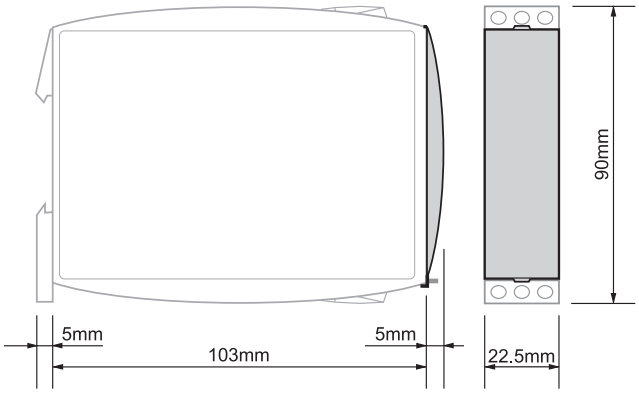

Mounting plate MP

Technical data

1. Function
Mounting plate for fixing TELE devices on a mounting plate or wall.

2. Mechanical design
Self-extinguishing plastic, three drillholes diameter 4mm.

3. Dimensions

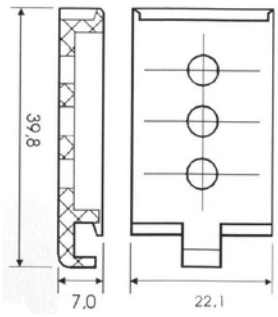

Remote potentiometer - Rondo R2

Technical data

1. Function
Remote potentiometer for front panel mounting. With the remote potentiometer time values can be adjusted from a distance.

2. Mechanical design
Self-extinguishing plastic housing, IP rating IP64 (front side).
Front panel mounting 22.5mm diameter.
Mounting position: any
Shockproof terminal connection according to VBG 4, IP rating IP10.
Tightening torque: max. 1Nm
Terminal capacity: 1 x 0.5 to 1,0mm² with/without multicore cable end

3. Output circuit
Maximum adjustment value:
1MΩ (R2 1MΩ 0.1) Scale 0.1 to 1
1MΩ (R2 1MΩ 0.3) Scale 0.3 to 3
Connections: 1 First
2 Wiper
3 Finish
Insulation voltage: 250V AC (in accordance with IEC 60664-1)
Surge voltage: 4kV, overvoltage category III (in accordance with IEC 60664-1)

4. Accuracy
Base accuracy: ±10% (of maximum scale value)
Repetition accuracy: ≤0,01%

5. Ambient conditions
Ambient temperature: -25 to+55°C (in accordance with IEC 60068-1)
Storage temperature: -25 to+65°C
Transport temperature: -25 to+65°C
Relative humidity: 15% to 85% (in accordance with IEC 60721-3-3 class 3K3)
Pollution degree: 2 (in accordance with IEC 60664-1)

6. Dimensions

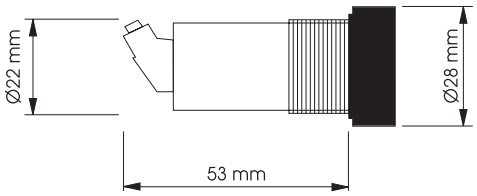

7. Connections

