1551H (Basic)

Top View of Assembly

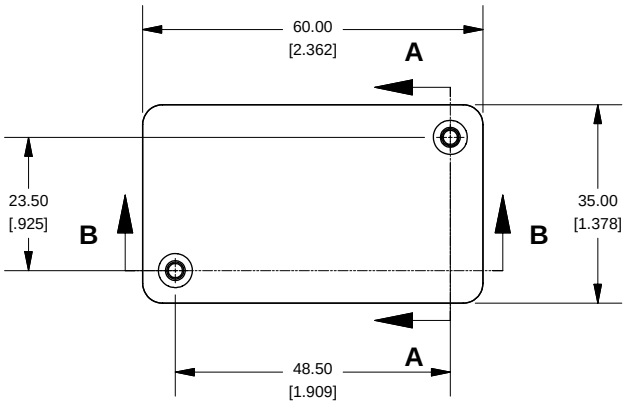

SECTION A-A
End View of Assembly

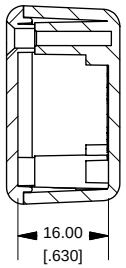

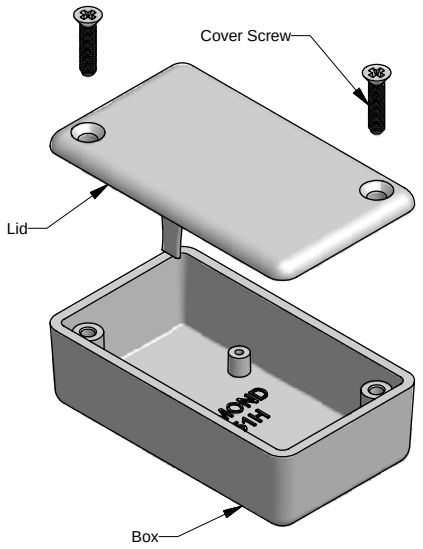

SECTION B-B
Side View of Assembly

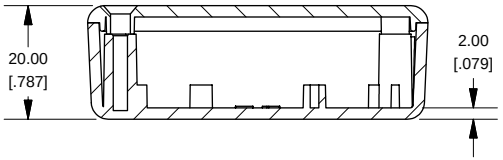

Top View Looking Inside Box

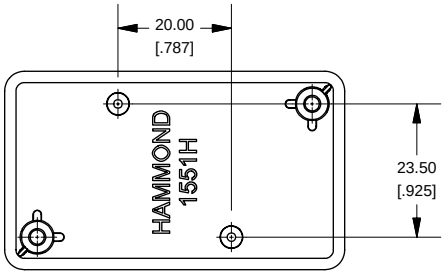

Lid

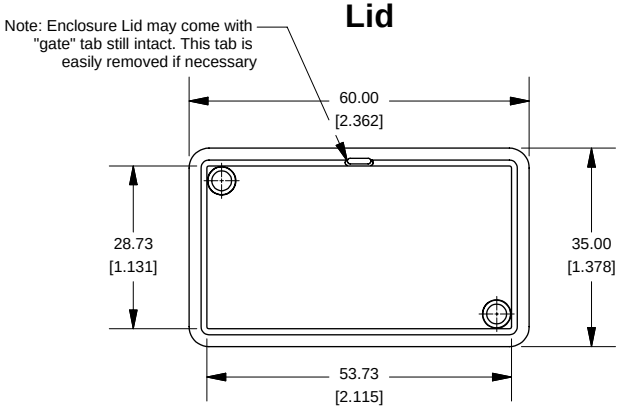

SECTION C-C
Boss Heights

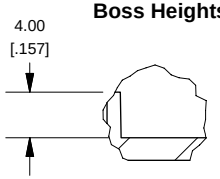

Maximum P.C. Board Size

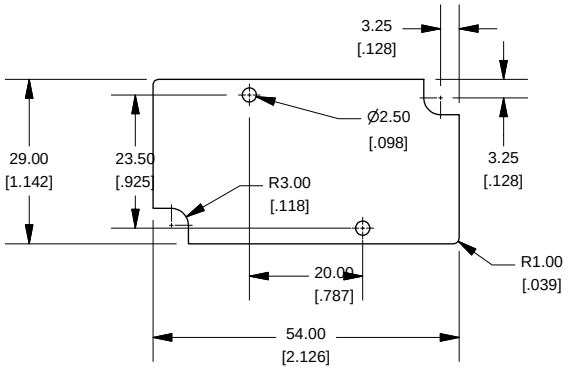

NOTE
Purchased assembly includes lid and box made from GP ABS material and cover screws.

1551H	
1551H Enclosure	
Black Enclosure - RAL 7011	1551HBK
Gray Enclosure - RAL 7035	1551HGY
ACCESSORIES	
Black Enclosure Cover Screws (Pkg 100) [#4 X 1/2" Self Tapping]	1591TS100BK
Gray Enclosure Cover Screws (Pkg 100) [#4 X 1/2" Self Tapping]	1591TS100
P.C. Board Screws [#2 X 3/16" Self-Tapping]	1551ATS100 (Pkg 100)

HAMMOND MANUFACTURING™

www.hammondmfg.com