E43007

Flange plate for level sensors

FLANGE PLATE 54-52X52

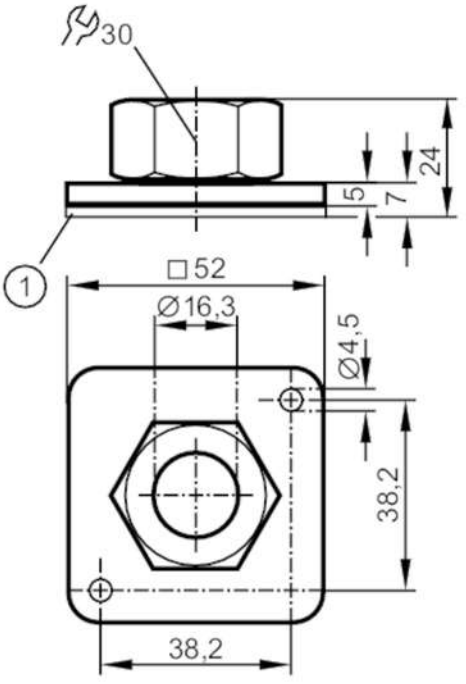

1 sealings

Application		
Design		for capacitive level sensors LK, LI, LT, LL
Pressure rating	[bar]	0.5
Operating conditions		
Ambient temperature	[°C]	0...80
Mechanical data		
Weight	[g]	121
Materials		flange: aluminium anodised; Lock nut: stainless steel; spacer: brass; clamping ring: FKM; Sealing: Tesnit
Tightening torque	[Nm]	6...9
Sensor connection		clamp adapter Ø 16 mm
Process connection		flange
Remarks		
Pack quantity		1 pcs.