

Image may differ from product. See technical specification for details.

16046

Radial shaft seal with metal case and SKF Wave lip, for oil or grease

Radial shaft seals are used between rotating and stationary machine components, or between components in relative motion. CRW1 seals are designed with a metal case, an SKF WAVE lip made of elastomer with higher pumping rate to reduce heat generation, and a garter spring to optimize sealing against the shaft. Most of the seals feature the SKF Bore Tite coating on the outside diameter that helps fill small imperfections in the housing bore.

- For oil or grease
- With garter spring
- WAVE lip creates higher pumping rate
- WAVE lip has less friction between shaft and lip
- WAVE lip has a lower temperature at the contact point

Overview

Dimensions

Shaft diameter	41.275 mm
Housing bore diameter	50.8 mm
Seal width	6.35 mm

Performance

Limiting speed	3 240 r/min
Maximum operating temperature	100 °C
Minimum operating temperature	-40 °C
Permissible circumferential speed	7.06 m/s
Rotational speed	3 240 r/min

Properties

Design	CRW1
Auxiliary lip	No
Sealing lip material	Nitrile rubber (NBR)
Type of outside diameter	Metal-cased with sealant coating on the outside diameter
Unit system	Inch

Logistics

Product net weight	0.0091 kg
eClass code	23-07-08-01
UNSPSC code	31181602

Technical specification

Type of outside diameter	Metal-cased with sealant coating on the outside diameter
Lip material	Nitrile rubber (NBR)
Seal design	CRW1

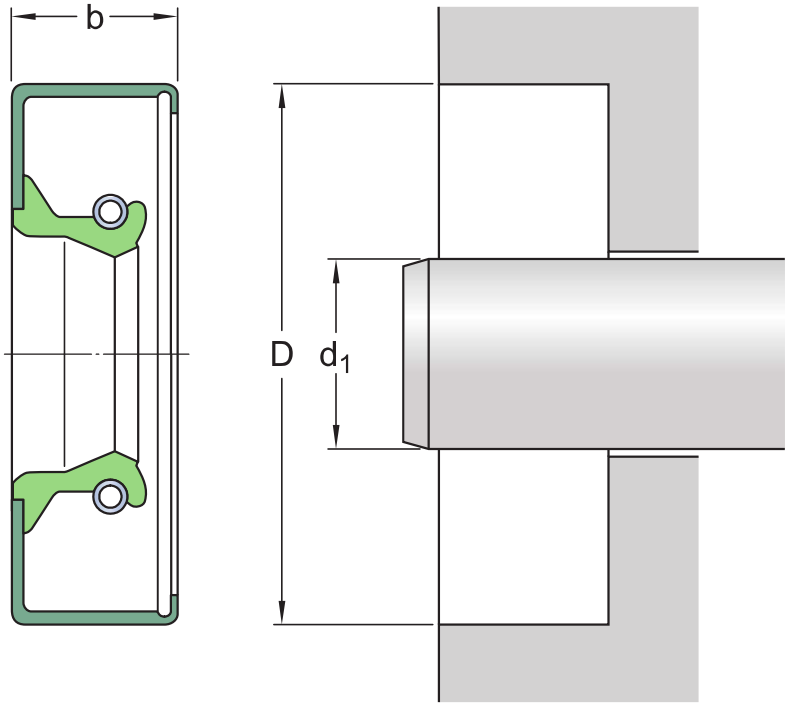

Dimensions

d_1	41.275 mm	Shaft diameter
D	50.8 mm	Housing bore diameter
b	6.35 mm	Seal width

Application and operating conditions

Operating temperature	min. -40 °C
Operating temperature	max. 100 °C
Circumferential speed	max. 7.06 m/s
Rotational speed	max. 3 240 r/min
Pressure differential	0.07 N/mm²

Associated products

SKF Speedi-Sleeve	99163

Compatible products

Recommended product

SKF Speedi-Sleeve	99163

Terms of use