SM5 MODULE OF LOGIC INPUTS

LUMEL EVERYTHING COUNTS

FEATURES:

MOD BUS

eCon software

INPUTS:

OUTPUTS:

RS 485

GALVANIC ISOLATION:

RS 232

Supply

RS 485



CE

- Adjoined information about the operating machine state to monitoring systems and PLC
- 8 relay logic inputs read out through RS-485/Modbus
- Fixing on a TS35 rail
- Signaling of input states on LED diodes
- Configuration through the free LPConfig software.

EXAMPLE OF APPLICATION

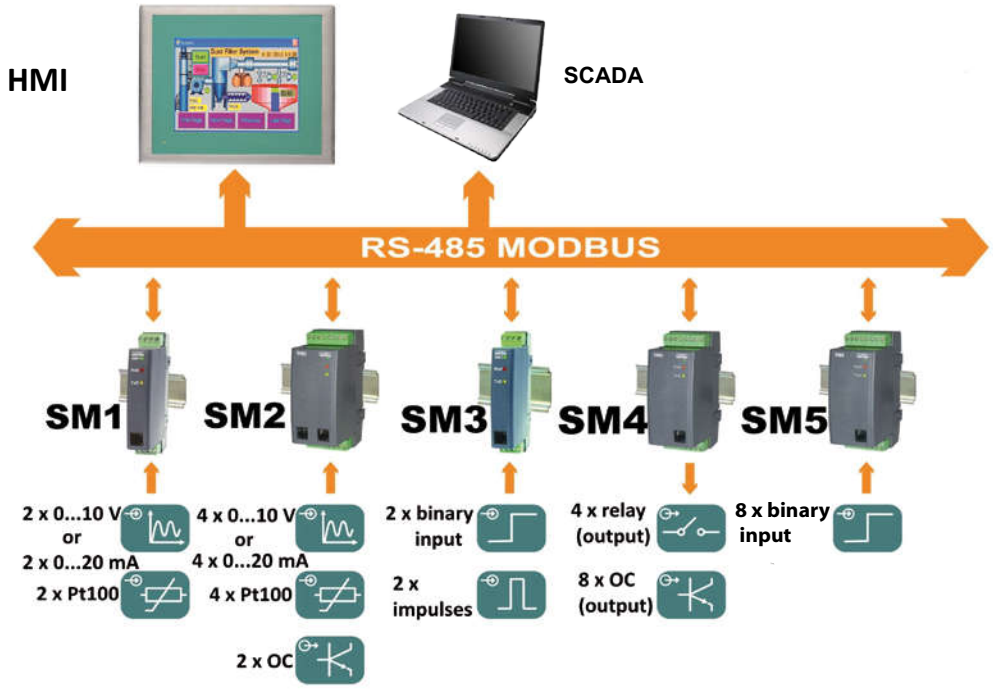

EXTERNAL FEATURES

Overall dimensions	45 x 120 x 100 mm	
Weight	< 0.25 kg	
Protection grade	IP40	from terminal side: IP20

DIGITAL INTERFACE

Interface type	Transmission protocol	Modes	Baud rate
RS-485	Modbus RTU	8N2,8E1,8O1,8N1	2400; 4800; 9600; 19.2 k; 38.4 k, 57.6 k, 115 k bit/s
	Modbus ASCII	8N1, 7E1, 7O1	

INPUTS

Input type	Range	
Logic	0 logic - open input; 1 logic - shorted input	

OUTPUTS

Output type	Properties	Remarks
Digital interface	RS - 485	Modbus ASCII/RTU

RATED OPERATING CONDITIONS

Supply voltage	85...253 V a.c./d.c. (40...400 Hz) or d.c. 20...50 V a.c./d.c. (40...400 Hz) or d.c.	Input power: ≤ 4 VA
Temperature	ambient: -10...23...55°C	
Relative humidity	< 95%	
Operating position	on a TS35 rail	
External magnetic field	< 400 A/m	

Export department:
+48 68 45 75 130
e-mail: export@lumel.com.pl

LUMEL S.A.
ul. Słubicka 4
65-127 Zielona Góra
POLAND
WWW.LUMEL.COM.PL

SM5 MODULE OF LOGIC INPUTS

SAFETY AND COMPABILITY REQUIREMENTS

Electromagnetic compatibility	Noise immunity	acc. to EN 61000-6-2
	Noise emissions	acc. to EN 61000-6-4
Isolation between circuits		acc. to EN 61010-1
Pollution level	2	
Installation category	III	
Maximum phase-to-earth operating voltage	Supply: 300 V, input 50 V, Output: 50 V	
Altitude a.s.l.	2000 m	

CONNECTION DIAGRAMS

Electrical connection of the SM5 logic input module

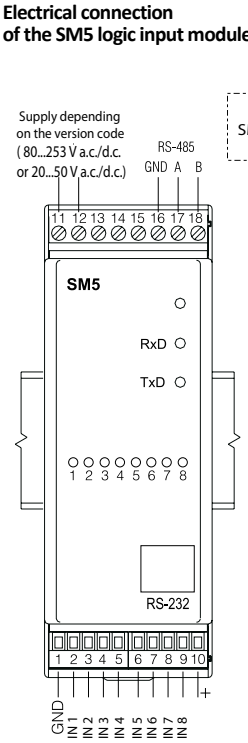

Connection of RS-485 and RS-232 interfaces

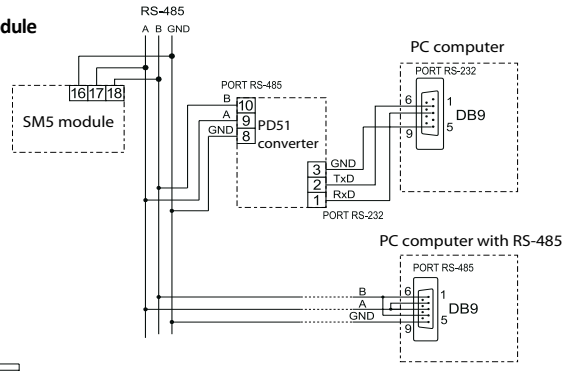

Description of logic input module leads.

Terminal No	Terminal description
1	**GND** line of logic inputs
2	**IN 1** line - input no 1
3	**IN 2** line - input no 2
4	**IN 3** line - input no 3
5	**IN 4** line - input no 4
6	**IN 5** line - input no 5
7	**IN 6** line - input no 6
8	**IN 7** line - input no 7
9	**IN 8** line - input no 8
10	Line 5 V d.c.
11,12	**Lines of module supply**
13...15	Not used
16	GND RS-485 line with optoisolation
17	Line **A** of RS-485 interface with optoisolation
18	Line **B** of RS-485 interface with optoisolation

Connection of RS-232 interface

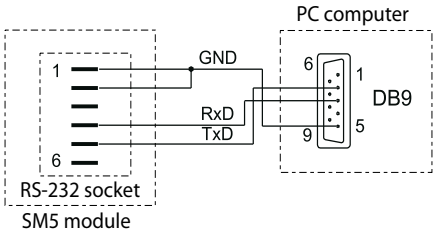

ORDERING

Module of logic inputs - SM5	X	XX	X
Supply:			
85...253 V a.c./d.c.	**1**		
20...50 V a.c./d.c.	**2**		
Version:			
standard		**00**	
custom-made*		**XX**	
Acceptance tests:			
without additional quality inspection requirements			**8**
with an extra quality inspection certificate			**7**
acc.to customers request *			**X**

* after agreeing with the manufacturer

Ordering example:

The code **SM5 - 1 00 7** means:

SM5 - module of SM5 type
1 - supply voltage: 85...253 V a.c./d.c.
00 - standard version
7 - with an extra quality inspection certificate

For more information about LUMEL's products please visit our website: www.lumel.com.pl

Export department:
+48 68 45 75 130
e-mail: export@lumel.com.pl

LUMEL S.A.
ul. Słubicka 4
65-127 Zielona Góra
POLAND
WWW.LUMEL.COM.PL