Brand of NTN corporation

Technical data

USFL203

Bearing units



Grey cast housing, radial insert ball bearing with socket set screws, single lip seal

KIT CONTENT

US.203.G2, FL203

VISUAL (S)

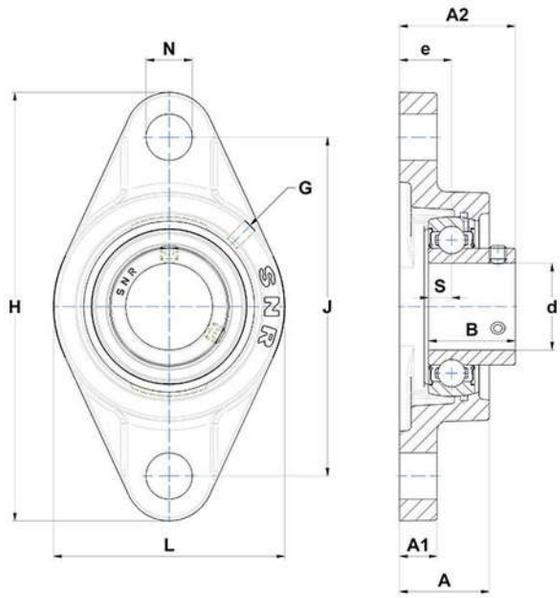

PRODUCT DEFINITION

Brand	SNR
A - Housing height	25,5 mm
A1 - Housing foot height / flange height	11 mm
A2 - Total height from mounting surface	31 mm
B - Width of Inner Ring	22 mm
d - Shaft diameter	17 mm

NTN Europe
1 rue des Usines · BP 2017 · 74010 Annecy Cedex · France · Tel. +33 (0)4 50 65 30 00
S.A. au capital de 322 639 919 € · RCS ANNECY B 325 821 072 · Id. Fiscale : FR 48 325 821 072
SIRET 325 821 072 00015 · Code APE 2815 Z · Code NACE 28.15

USFL203
Bearing units

PRODUCT DEFINITION	
e - Distance mounting surface to bearing center	15 mm
G - Grease fitting	M6x1
H - Housing length, width or diameter	99 mm
J - Mounting holes distance	76,5 mm
L - Housing width / diameter	57 mm
N - Mounting hole dimension	12 mm
S - Distance front side/bearing centre	6 mm

PRODUCT PERFORMANCE	
C - Dynamic load rating	9550000 mN
C0 - Static load rating	4780000 mN
Operating temperature min.	253,15 °K
Operating temperature max.	373,15 °K

OTHER FEATURES	
Mass	0,36 kg
Recommended tightening torque for set screw	3.5 N-m