Datasheet - AZM 170-11ZRK 24 VAC/DC

Solenoid interlock / AZM 170

☒ Preferred typ



(Minor differences between the printed image and the original product may exist!)

- thermoplastic enclosure
- Double-insulated
- Compact design
- 90 mm x 84 mm x 30 mm
- 1 Cable entry M 20 x 1.5
- Interlock with protection against incorrect locking.
- Long life
- High holding force
- IDC method of termination
- Manual release

Ordering details

Product type description	AZM 170-11ZRK 24 VAC/DC
Article number	1140788
EAN code	4030661119762

Approval

Approval	BG USA/CAN CCC

Classification

Standards	EN ISO 13849-1
B_{10d} Opener (NC)	2.000.000
Mission time	20 Years
notice	$MTTF_d = \frac{B_{10d}}{0,1 \times n_{op}}$ $n_{op} = \frac{d_{op} \times h_{op} \times 3600\ s/h}{t_{cycle}}$

Global Properties

Product name	AZM 170
Standards	EN 60947-5-1, BG-GS-ET-19
Compliance with the Directives (Y/N) CE	Yes
Number of actuating directions	2 piece
Active principle	electromechanical
Duty cycle	Magnet 100 %
Materials	
- Material of the housings	Plastic, glass-fibre reinforced thermoplastic, self-extinguishing
- Material of the contacts	Silver
Housing coating	None
Weight	270 g

Mechanical data

Design of electrical connection	IDC method of termination
Cable section	
- Min. Cable section	1 x 0,75 mm²
- Max. Cable section	1 x 1.0 mm², flexible
Mechanical life	> 1.000.000 operations
Emergency unlocking device (Y/N)	No
Manual release (Y/N)	Yes
- bottom	
Emergency release (Y/N)	No
Latching force	30 N
Positive break force	8.5 N
positive break travel	11 mm
Clamping force F_{max}	1000 N
Max. Actuating speed	2 m/s

Ambient conditions

Ambient temperature	
- Min. environmental temperature	−25 °C
- Max. environmental temperature	+60 °C
Protection class	IP67 to IEC/EN 60529

Electrical data

Design of control element	Normally open contact (NO), Opener (NC)
Switching principle	Creep circuit element
Number of auxiliary contacts	1 piece
Number of safety contacts	1 piece
Power to unlock	Yes
Power to lock	No
Rated control voltage U_s	24 VAC/DC
Power consumption	max. 10 W
Rated impulse withstand voltage U_{imp}	4 kV
Rated insulation voltage U_i	250 V
Thermal test current I_{the}	10 A
Utilisation category	AC-15: 230 V / 4 A, DC-13: 24 V / 4 A
Max. fuse rating	6 A gG D-fuse

ATEX

Explosion protection categories for gases	None
Explosion protected category for dusts	None

Miscellaneous data

Applications	 sliding safety guard,  removable guard,  hinged safety guard

Dimensions

Dimensions of the sensor	
- Width of sensor	90 mm
- Height of sensor	84 mm
- Length of sensor	30 mm

notice

This type termination (IDC) method enables simple connetion of flexible conductors without the need for the use of conductor ferrules

Individual coding available on request

Manual release

- For manual release using M5 triangular key, available as accessory

Diagram

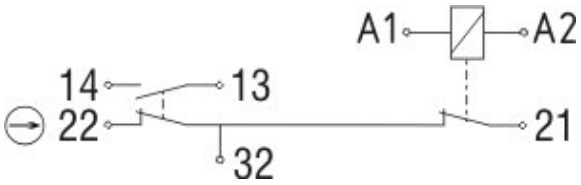

Note Diagram

positive break NC contact

active

no active

Normally-open contact

Normally-closed contact

Switch travel diagram

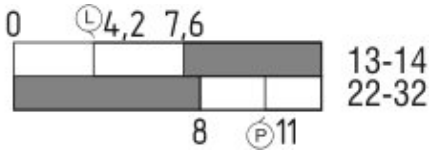

Notes Switch travel diagram

Contact closed

Contact open

Setting range

Break point

Positive opening sequence/- angle

VS adjustable range of NO contact
VÖ adjustable range of NC contact
N after travel

Ordering suffix

The applicable ordering suffix is added at the end of the part number of the safety switch.
Order example: AZM 170-11ZRK 24 VAC/DC**-1637**

...**-1637**	0,3 µm gold-plated contacts
...**ST-2431**	connector M12 , Individual solenoid monitoring

Ordering code

AZM 170**(1)**-**(2)**Z**(3)**K**(4)**-**(5)**-**(6)**-**(7)**

(1)

without	IDC method of termination
SK	Screw connection

(2)

11	1 Normally open contact (NO) / 1 Opener (NC)
02	2 Opener (NC)
12/0.0	1 Normally open contact (NO), 2 Opener (NC) / -

(3)

without	Latching force 5 N
R	Latching force 30 N
I	Individual coding

(4)

without	Power to unlock
A	Power to lock

(5)

without	cable gland
ST	Connector M12 x 1
ST-2431	Connector M12 x 1, Individual solenoid monitoring

(6)

24VAC/DC	U_s 24 VAC/DC
110VAC	U_s 110 VAC
230VAC	U_s 230 VAC

(7)

without	Manual release
2197	Manual release from side (Power to unlock)
1637	gold-plated contacts

AZM 170ST and AZM 170SK

AZM 170ST-(1)Z(2)K(3)-(4)-(5)-024

AZM 170SK-(1)Z(2)K(3)-(4)-(5)-024

(1)

11/11	1 Normally open contact (NO), 1 Opener (NC) / 1 Normally open contact (NO), 1 Opener (NC)
11/02	1 Normally open contact (NO), 1 Opener (NC) / 2 Opener (NC)
12/00	1 Normally open contact (NO), 2 Opener (NC) / -
12/11	1 Normally open contact (NO), 2 Opener (NC) / 1 Normally open contact (NO), 1 Opener (NC)
12/02	1 Normally open contact (NO), 2 Opener (NC) / 2 Opener (NC)
02/01	2 Opener (NC), - / 1 Opener (NC), -
02/10	2 Opener (NC), - / 1 Normally open contact (NO), -

(2)

without	Latching force 5 N
R	Latching force 30 N

(3)

without	Power to unlock
A	Power to lock

(4)

1637	gold-plated contacts

(5)

2197	Manual release for Power to unlock

,

Images

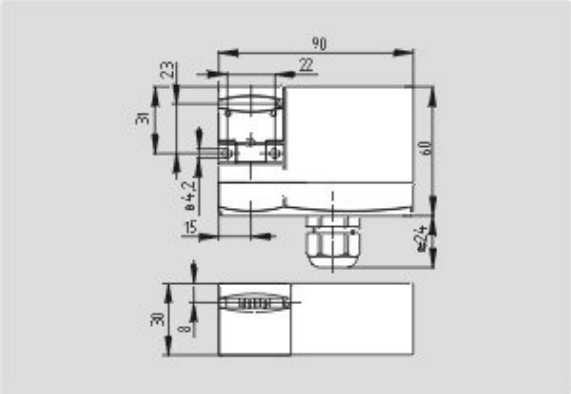

Dimensional drawing (basic component)

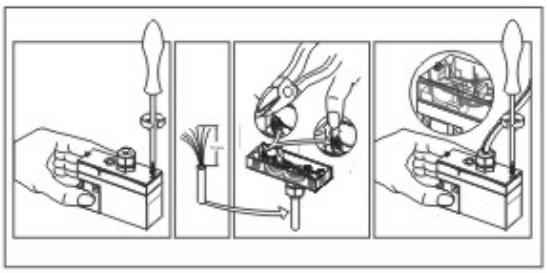

Assembly example

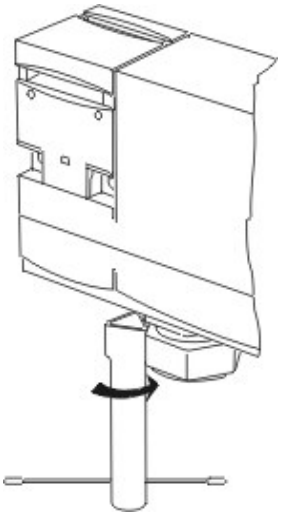

Detail photo

System components

Actuator



1122893 - AZ 17/170-B1

• Particularly suitable for sliding doors



1137406 - AZ 17/170-B1-2245

• Damps vibration on guard device



1122895 - AZ 17/170-B5

• Particularly suitable for hinged guards (front mounting)



1139788 - AZ 17/170-B11

• Particularly suitable for sliding doors



1139789 - AZ 17/170-B15

• Particularly suitable for hinged guards (front mounting)



1123391 - AZM 170-B6

• For very smal actuating radii
• The direction of actuation can be selected by applicable insertion of the insert

Accessories

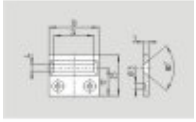

1208493 - AZM 170-B CENTERING GUIDE

• for AZ 17 and AZM 170



1100887 - TRIANGULAR KEY M5

• For manual release using M5 triangular key, available as accessory
• For maintenance, installation, etc.

Connector

A-K4M12

• Pre-wired cable
• 4-pole

S-K4M12

• Connector without cable
• 4-pole