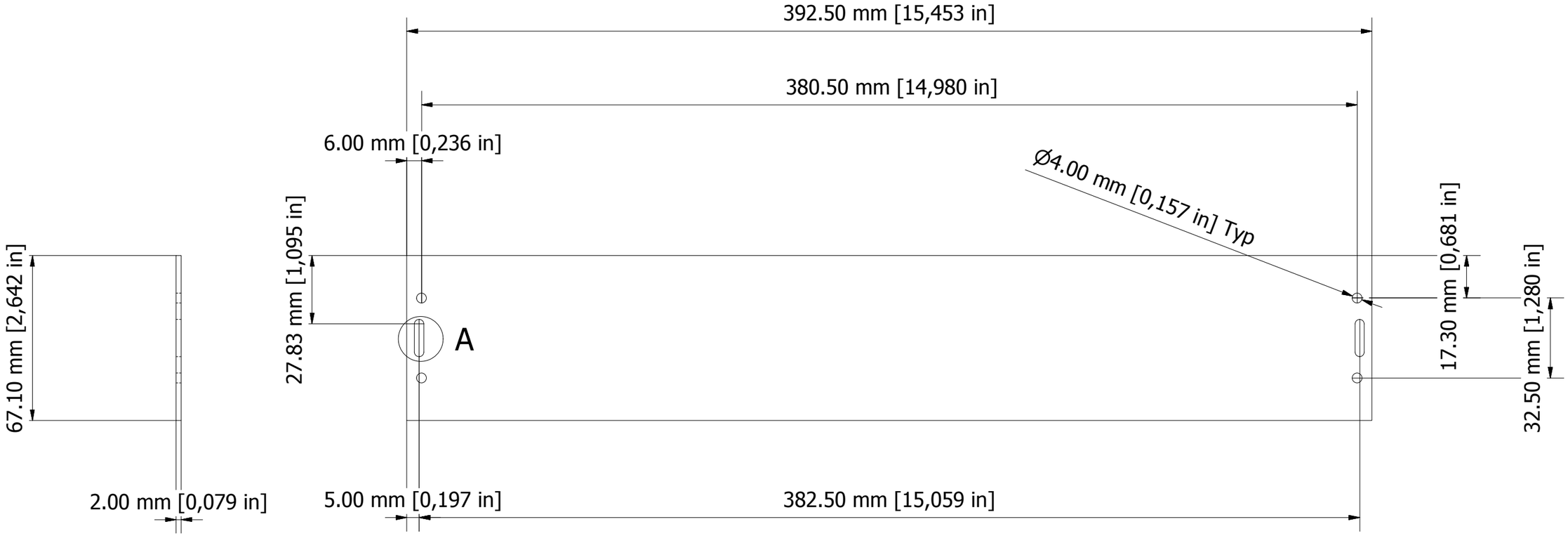

Detail A (1:0.35)

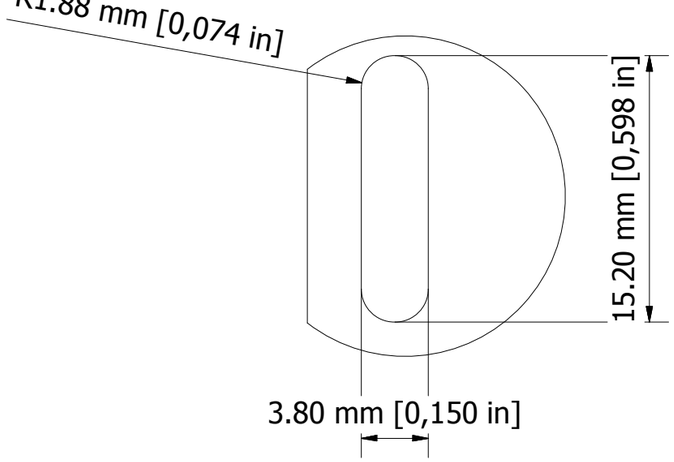

Notes:

1. All panels must be cut from sheet such that the metal grain runs horizontally.
2. Panels must be sheared from the same side.
3. Edges must be clean and free from burrs or tool witnesses.
4. Panel faces must be scratch free.
5. An instrument quality anodised finish is required.
6. Handle with care during manufacture.
7. Panels are to be supplied wrapped in protective paper.

FIRST ANGLE PROJECTION

Designed by	Description	Date	Scale
L Clark	2U (2HE) Front Panel Kit	19/04/2012	1:1

METCASE ENCLOSURES
15 Brunel Way, Segensworth East, Fareham,
Hampshire, UK. PO15 5TX
Tel: +44 (0)1489 583858 Email: metcase@okw.co.uk

www.metcase.com

Part Number	Issue	Sheet
M5900020	1	1 / 1

© OKW Enclosures Ltd (Date as shown). This drawing contains proprietary information of OKW Enclosures Ltd and is tendered subject to the following conditions. The information be retained in confidence, not be reproduced or copied, and not be used or incorporated in any product, unless permission is obtained in writing from OKW Enclosures Ltd.