Accessories
Bellows Coupling
For Solid Shaft Encoders
RCS-19-10-06

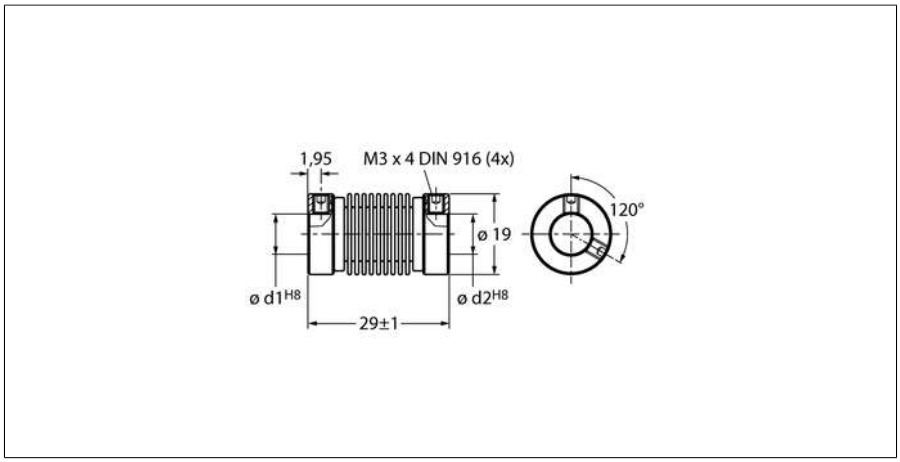

- Bellows coupling Ø 19 mm
- Bore diameter d1 = 10 mm, d2 = 6 mm

Type	RCS-19-10-06
ID	1545358

Edition • 2023-07-20T02:39:55+02:00