Rotating Mirror Beacon 839 / Accessories

Bracket BK



Part No.: 975.839.02

MECHANICAL DATA	
Length	240 mm
Width	160 mm
Height	49 mm
Materials	Stainless steel
Housing colour	Black
Weight with packaging	805 g
Product weight	695 g

APPROVAL DATA	
WEEE	No
Conforms with RED directive	No
Conforms with ATEX-directive	No
Conforms with CCC	No
Conforms with UL	No
Conforms with FCC	No
Conforms with IC	No
EAC certificate available	No
Conforms with AS-I	No
ICAO Certification	No
Conforms with DNV	No
Conforms with RoHS CN	No

! For additional installation and mounting information, refer to the appropriate user guide at www.werma.com. This printed copy is for information only and is subject to alteration.

Rotating Mirror Beacon 839 / Accessories

Bracket BK

DRAWING

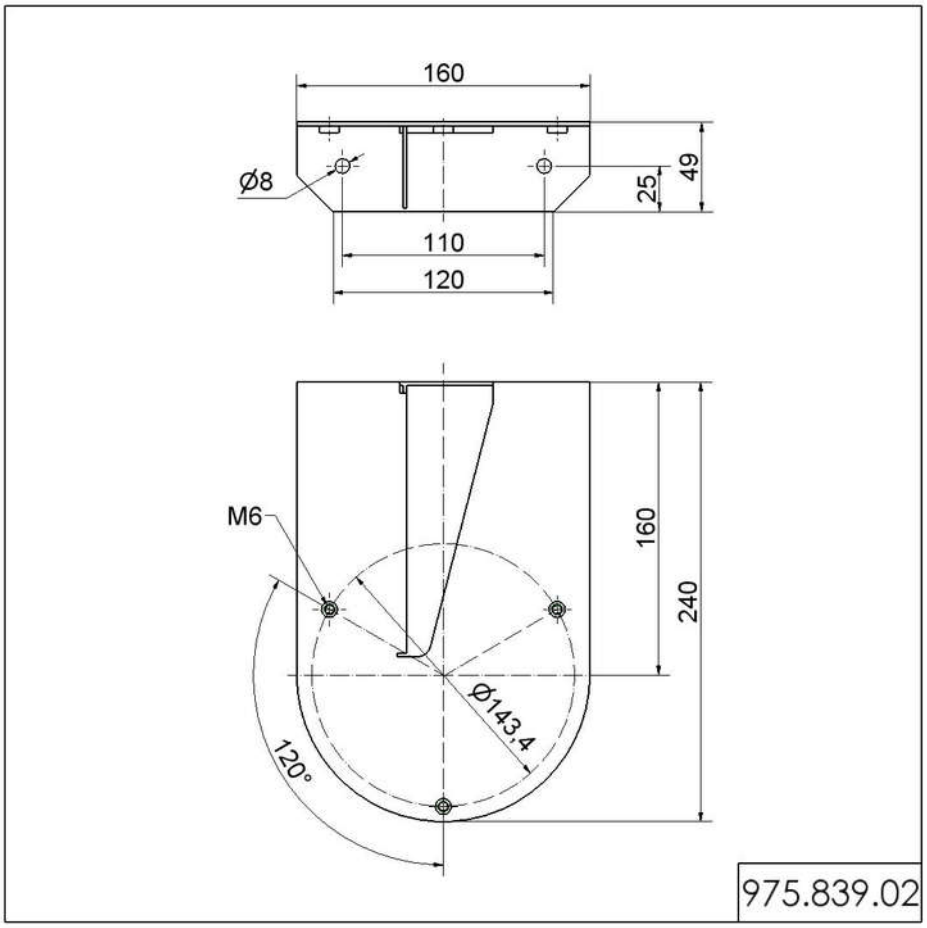

! For additional installation and mounting information, refer to the appropriate user guide at www.werma.com. This printed copy is for information only and is subject to alteration.