

Inductive sensor

NBN30-U1-A2

- Sensor head bidirectional and rotatable
- 4 LEDs indicator for 360° visibility
- 30 mm non-flush
- 4-wire DC

Dimensions

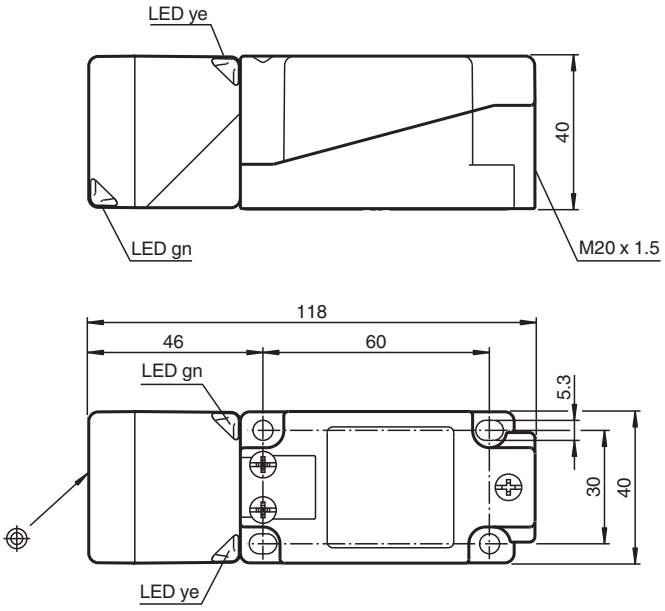

Technical Data

General specifications		
Switching function		complementary
Output type		PNP
Rated operating distance	s_n	30 mm
Installation		non-flush
Output polarity		DC
Assured operating distance	s_a	0 ... 24.3 mm
Reduction factor r_{Al}		0.33
Reduction factor r_{Cu}		0.31
Reduction factor r_{304}		0.74
Reduction factor r_{Brass}		0.38
Output type		4-wire
Nominal ratings		

Release date: 2024-05-27 Date of issue: 2024-05-28 Filename: 194786_eng.pdf

Technical Data

Operating voltage	U_B	10 ... 30 V
Switching frequency	f	0 ... 230 Hz
Hysteresis	H	typ. 5 %
Reverse polarity protection		reverse polarity protected
Short-circuit protection		pulsing
Voltage drop	U_d	≤ 2 V
Operating current	I_L	0 ... 200 mA
Off-state current	I_r	0 ... 0.5 mA
No-load supply current	I_0	≤ 20 mA
Time delay before availability	t_v	80 ms
Operating voltage indicator		LED, green
Switching state indicator		LED, yellow
Functional safety related parameters		
$MTTF_d$		1057 a
Mission Time (T_M)		20 a
Diagnostic Coverage (DC)		0 %
Compliance with standards and directives		
Standard conformity		
Standards		EN IEC 60947-5-2
Approvals and certificates		
UL approval		cULus Listed, General Purpose
CCC approval		CCC approval / marking not required for products rated ≤36 V
Ambient conditions		
Ambient temperature		-25 ... 85 °C (-13 ... 185 °F)
Mechanical specifications		
Connection type		screw terminals
Information for connection		A maximum of two conductors with the same core cross section may be mounted on one terminal connection! tightening torque 1.2 Nm + 10 %
Core cross section		up to 2.5 mm²
Minimum core cross-section		without wire end ferrules 0.5 mm² , with connector sleeves 0.34 mm²
Maximum core cross-section		without wire end ferrules 2.5 mm² , with connector sleeves 1.5 mm²
Housing material		PA/metal with epoxy powder coating
Sensing face		PA
Housing base		plastic
Degree of protection		IP68 / IP69K
Mass		225 g
Dimensions		
Height		40 mm
Width		40 mm
Length		118 mm
Note		Tightening torque: 1.8 Nm (housing)

Connection

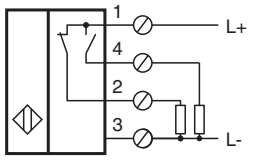

Release date: 2024-05-27 Date of issue: 2024-05-28 Filename: 194786_eng.pdf