Brand of NTN corporation

# Technical data

## EXFCE208

Bearing units



Grey cast housing, radial insert ball bearing with eccentric locking collar, seal with slinger

## KIT CONTENT

**EX.208.G2, FCE208**

## VISUAL (S)

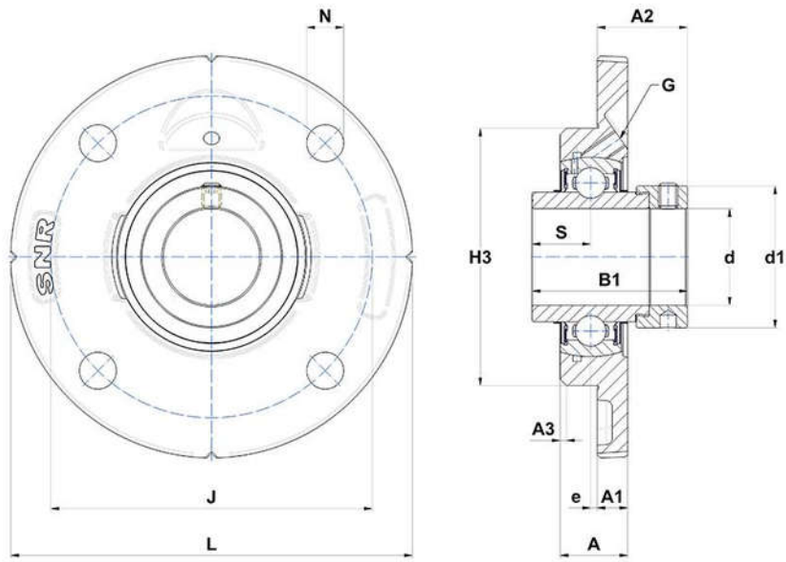


## PRODUCT DEFINITION

| | |
|---|---|
| **Brand** | SNR |
| **A - Housing height** | 23 mm |
| **A1 - Housing foot height / flange height** | 11,5 mm |
| **A2 - Total height from mounting surface** | 33,9 mm |
| **A3 - Centering depth / chamfer dimension** | 2 mm |
| **B - Width of Inner Ring** | 42,8 mm |

# EXFCE208
Bearing units

| PRODUCT DEFINITION | |
|---|---|
| **B1 - Overall width Inner Ring** | 56,3 mm |
| **d - Shaft diameter** | 40 mm |
| **d1 - Outer dia of eccent. Lock. collar / nut of adapter sleeve** | 58 mm |
| **e - Distance mounting surface to bearing center** | -1 mm |
| **G - Grease fitting** | M6x1 |
| **H3 - Centering dia** | 100 mm |
| **J - Mounting holes distance** | 120 mm |
| **L - Housing width / diameter** | 145 mm |
| **N - Mounting hole dimension** | 11,5 mm |
| **S - Distance front side/bearing centre** | 21,4 mm |

| PRODUCT PERFORMANCE | |
|---|---|
| **C - Dynamic load rating** | 29600000 mN |
| **C0 - Static load rating** | 18200000 mN |
| **Operating temperature min.** | 253,15 °K |
| **Operating temperature max.** | 373,15 °K |

| OTHER FEATURES | |
|---|---|
| **Mass** | 1,78 kg |
| **Recommended tightening torque for set screw** | 11.5 N-m |