# Product sheet

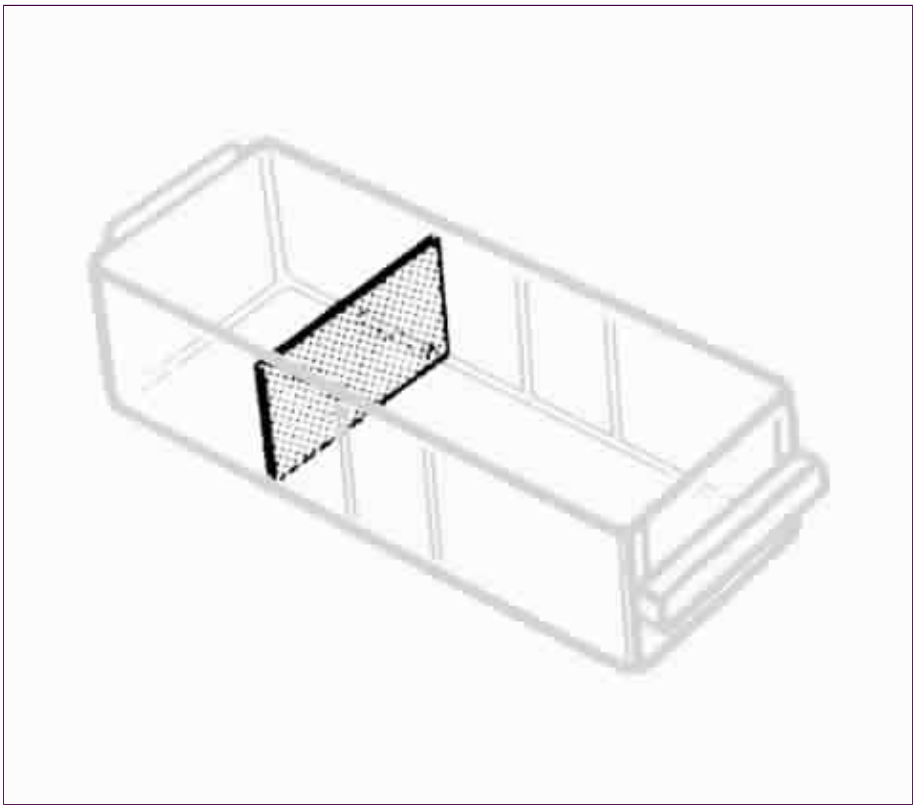

*Item number/name* **118248**

**ESD 150-00 Divider**

*EAN unitnumber* 5733439118248

*Colour* ESD

*Description of the item*

ESD Dividers for drawer 150-00 (60 in each pack).

*BOM items*

| Item number | Product | | Quantity |
|---|---|---|---|
| 223126 | 35/52 DIVS | | 60 |
| 201223 | 60x35/52 POSE | ESD/00 | 1 |

*Materials*

| Item number | Material |
|---|---|
| 600279 | ESD |
| 600248 | ESD |
| 600170 | Polypropylene - PP |

*Item dimensions*

| | |
|---|---|
| Net. Depth (mm) .....: | 1,6 |
| Net. Width (mm) .....: | 52,0 |
| Net. Height (mm) .....: | 32,0 |
| Inner Depth (mm) .....: | 0,0 |
| Inner Width (mm).....: | 0,0 |
| Inner Height (mm) .....: | 0,0 |

*Weight*

| | |
|---|---|
| Net weight (Kgs) .....: | 0,123 |
| Tare weight (Kgs) .....: | 0,017 |
| Gross weight (Kgs) .....: | 0,140 |

*Volume*

| | |
|---|---|
| Multiple (Pieces) .....: | 25,00 |
| Volume (m3) .....: | 0,00063 |

*Capacity load*

| | |
|---|---|
| Carr. Load (Kgs) .....: | 0,00 |
| Carr. Load (Ltrs) .....: | 0,00 |


**Sales**

raaco Great Britain Ltd
VAT No.: GB 232 6219 86
Wenrisc House, Meadow Court
High Street, Witney
Oxfordshire OX28 6ER
Tel: (01993) 776333
Fax: (01993) 776444

**Headquarters:**

raaco A/S
CVR No.: DK 22 12 28 19
VAT No.: DK 91 42 64 55
Platanvej 19
DK-4800 Nykøbing F
Tel.: +45 54 88 84 00