PI008A

Pressure sensor with display

PI-,25BREA01-MFRKG/US/3D/3G /P

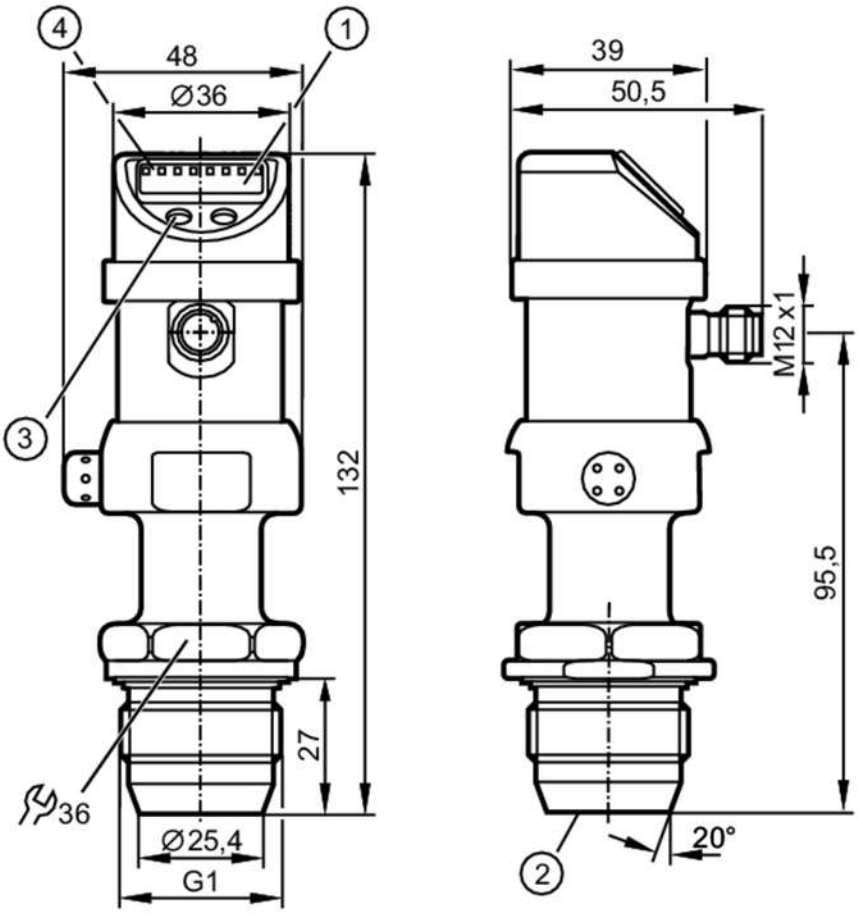

1 alphanumeric display 4-digit
2 recessed non flush mount measuring cell
3 programming button
4 status LEDs

CE EC 1935/2004 Ex FDA UK CA

Product characteristics				
Number of inputs and outputs	Number of digital outputs: 1; Number of analogue outputs: 1			
Measuring range	-0.0124...0.25 bar	-12.4...250 mbar	-5...100.4 inH2O	-1.24...25 kPa
Process connection	threaded connection G 1 external thread sealing cone			
Application				
Special feature	Gold-plated contacts			
Application	food and beverage industry			
Installation	freely rotatable housing 350°			
Media	viscous media and liquids with suspended particles; liquids and gases			
Medium temperature [°C]	-20...60; (when used outside the hazardous area:; Ambient temperature: -25...85 °C; Medium temperature: -25...125 °C / 145 °C < 1h)			
Min. bursting pressure	30000 mbar	12044 inH2O	3000 kPa	
Pressure rating	6000 mbar	2400 inH2O	600 kPa	
Type of pressure	relative pressure; vacuum			
Electrical data				
Operating voltage [V]	18...32 DC			

PI008A

Pressure sensor with display

PI-,25BREA01-MFRKG/US/3D/3G /P

Current consumption	[mA]	< 50
Protection class		III
Reverse polarity protection		yes
Power-on delay time	[s]	0.5
Measuring principle		hydrostatic
Integrated watchdog		yes

Inputs / outputs

Number of inputs and outputs	Number of digital outputs: 1; Number of analogue outputs: 1

Outputs

Total number of outputs		2
Output signal		switching signal; analogue signal; (configurable)
Electrical design		PNP/NPN
Number of digital outputs		1
Output function		normally open / normally closed; (parameterisable)
Max. voltage drop switching output DC	[V]	2
Permanent current rating of switching output DC	[mA]	250
Switching frequency DC	[Hz]	6
Number of analogue outputs		1
Analogue current output	[mA]	4...20, invertible; (scalable 1:4)
Max. load	[Ω]	(Ub - 10 V) / 20 mA
Analogue voltage output	[V]	0...10, invertible; (scalable 1:4)
Min. load resistance	[Ω]	2000
Short-circuit protection		yes
Type of short-circuit protection		pulsed
Overload protection		yes

Measuring/setting range

Measuring range	-0.0124...0.25 bar	-12.4...250 mbar	-5...100.4 inH2O	-1.24...25 kPa
Set point SP	-12...250 mbar	-4.8...100.4 inH2O	-1.2...25 kPa	
Reset point rP	-12.4...249.6 mbar	-5...100.2 inH2O	-1.24...24.96 kPa	
Analogue start point	-12.4...187.4 mbar	-5...75.2 inH2O	-1.24...18.74 kPa	
Analogue end point	50...250 mbar	20.1...100.4 inH2O	5...25 kPa	
In steps of	0.2 mbar	0.1 inH2O	0.02 kPa	

Accuracy / deviations

Switch point accuracy	[% of the span]	< ± 0,2; (Turn down 1:1)
Repeatability	[% of the span]	< ± 0,1; (with temperature fluctuations < 10 K; Turn down 1:1)
Characteristics deviation	[% of the span]	< ± 0,2; (Turn down 1:1 , linearity, incl. hysteresis and repeatability , limit value setting to DIN EN IEC 62828-1)
Linearity deviation	[% of the span]	< ± 0,15; (Turn down 1:1)
Hysteresis deviation	[% of the span]	< ± 0,15; (Turn down 1:1)
Long-term stability		< ± 0,1; (Turn down 1:1; per year)

PI008A

Pressure sensor with display

PI-,25BREA01-MFRKG/US/3D/3G /P

[% of the span]			
Temperature coefficient zero point [% of the span / 10 K]		< ± 0,05; (0...70 °C)	
Temperature coefficient span [% of the span / 10 K]		< ± 0,15; (0...70 °C)	
Response times			
Response time	[ms]	< 100	
Damping process value dAP	[s]	0.1...100	
Damping for the analogue output dAA	[s]	0.1...100	
Step response time analogue output	[ms]	25	
Software / programming			
Parameter setting options		hysteresis / window; normally open / normally closed; switching logic; current/voltage output; Damping; adaptation of displayed values; display can be rotated and switched off; Display unit; zero point; span	
Operating conditions			
Ambient temperature	[°C]	-20...60	
Storage temperature	[°C]	-40...100	
Protection		IP 65	
Tests / approvals			
ATEX marking		II 3D Ex tc IIIC T90°C Dc X	
		II 3G Ex nA IIC T4 Gc X	
EMC		EN 61000-4-2 ESD	4 kV CD / 8 kV AD
		EN 61000-4-3 HF radiated	10 V/m
		EN 61000-4-4 Burst	2 kV
		EN 61000-4-5 Surge	0,5/1 kV
		EN 61000-4-6 HF conducted	10 V
Shock resistance		DIN IEC 68-2-27	50 g (11 ms)
Vibration resistance		DIN IEC 68-2-6	20 g (10...2000 Hz)
MTTF	[years]	163	
Mechanical data			
Weight	[g]	509	
Housing		cylindrical	
Dimensions	[mm]	Ø 36 / L = 132	
Materials		stainless steel (316L/1.4404); PC; PBT; PEI; FKM; PTFE	
Materials (wetted parts)		ceramics (99.9 % Al2O3); stainless steel (316L/1.4435); stainless steel (316L/1.4404); surface characteristics: Ra < 0,4 / Rz 4; PTFE; EPDM	
Min. pressure cycles		100 million	
Process connection		threaded connection G 1 external thread sealing cone	
Displays / operating elements			
Display		Display unit	6 x, green
		switching status	LED, yellow
		function display	alphanumeric display, 4-digit
		measured values	alphanumeric display, 4-digit

PI008A

Pressure sensor with display

PI-,25BREA01-MFRKG/US/3D/3G /P

Display unit	mbar; kPa; inH2O; mmWS; % of the span

Remarks

Pack quantity	1 pcs.

Electrical connection

Connector: 1 x M12; coding: A; Contacts: gold-plated



Connection

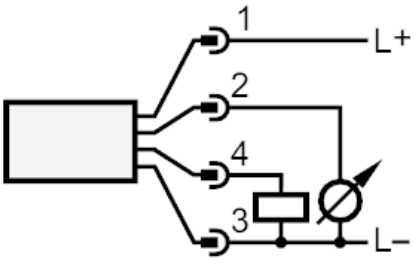

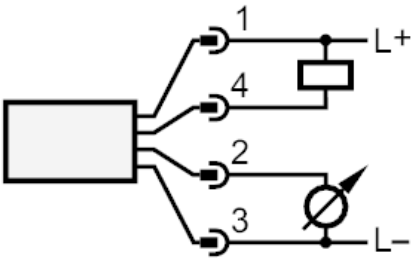

OUT1	switching output
OUT2	analogue output