INSTRUCTION HANDBOOK

1SDH002294A1001 - ECN000285442

Tmax XT XT3

Disassembly instructions

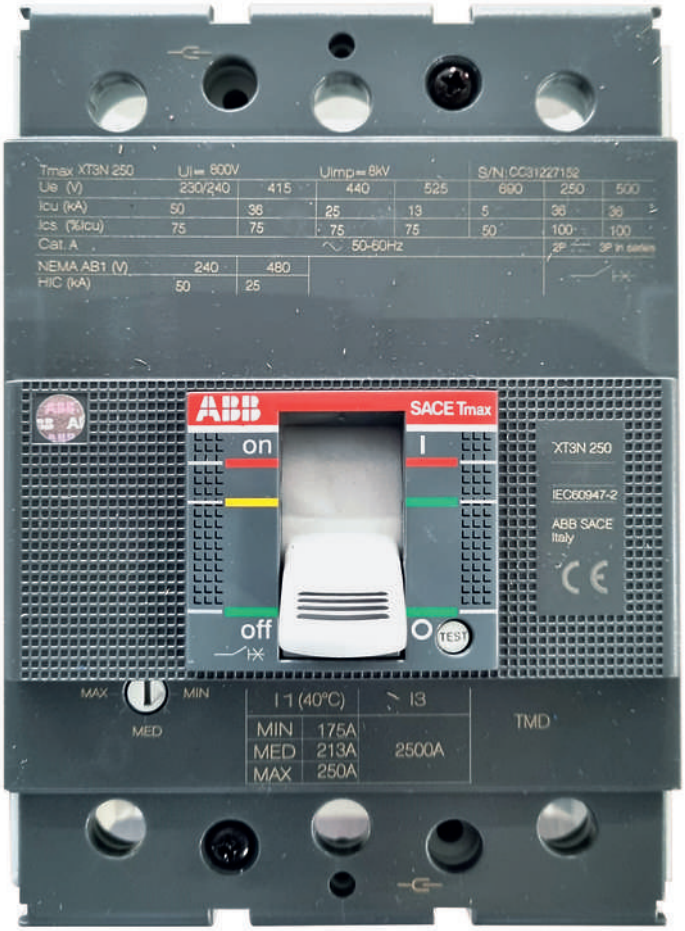

1. SCOPE

Scope of this document is to illustrate the step-by-step disassembly process of ABB SACE Tmax XT XT3 moulded case circuit breaker.
Document is focused on Tmax XT XT3 3p IEC version, anyway it allows to cover other versions of Tmax XT XT3 circuit breaker with just few slight differences to be taken into account.

2. SAFETY NOTES

Before proceeding with any disassembly operation, it's mandatory to put the circuit breaker in open position.
Disassembly operations of circuit breakers must be performed by qualified and skilled personnel in the electrical field (IEV 195-04-01: person with relevant education and experience to enable him or her to perceive risks and to avoid hazards which electricity can create) and having a detailed knowledge of circuit breakers.
Disassembly activites must be performed in an ergonomic workspace able to ensure protection of persons demanded to perform disassembly activities.
Applicable national legislation and international standards in force at the time of disassembly of circuit breakers must be taken into account in addition to prescriptions illustrated in this document.
ABB declines any responsibility for injury to people or damage to property resulting from a failure to comply with the instructions set out in this document and with any applicable safety standard.

3. PERSONAL PROTECTIVE EQUIMENT (PPE)

When performing disassembly, following safety Personal Protective Equipment (PPE) must be worn:

Gloves



Glasses



Safety shoes



Protective clothes



4. TOOLS

Disassembly operations require the use of tools (e.g. screwdriver, torx key, pliers, …); tools to be used are specified inside each phase of the disassembly process (see Chapter 6).

5. SEPARATE TREATMENT

Table below lists parts requiring a separate treatment adding information about part location inside circuit breakers and related quantity.

Description	Position inside circuit breaker	Quantity
Cap kits	In correspondence of circuit breaker connection terminals	6
Trip unit cover	Mounted in the lower part of the circuit breaker	1
Trimmer	Mounted on the circuit breaker cover	1
Sides of the operating mechanism	Parts constituting the operating mechanism	2
Tripping shaft	Between the operating mechanism and the tripping groups	1
Rear cover	Mounted on the back side of the circuit breaker case	1

If disassembled parts require a separate treatment a specific indication is provided inside each phase with reason why for the separate treatment (see Chapter 6).

6. DISASSEMBLY PROCESS

Circuit breakers disassembly process is constituted by a sequence of operations to be performed on products after their dismounting from original installation. For each phase following information is provided:

- Part/parts to be disassembled (title of the phase)
- Tools to be used
- Description of actions to be performed
- Pictures showing actions to be performed
- List, quantity and picture of disassembled parts with an indication about separate treatment (when applicable)
- In case of potential hazards signal below is reported



6.1 PHASE 1 – CAP KITS

Tools

Allen key

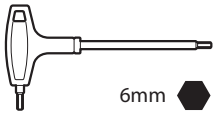

Flat screwdriver



Actions to be performed

1

By means of the allen key remove the screws connected with the cap kits.

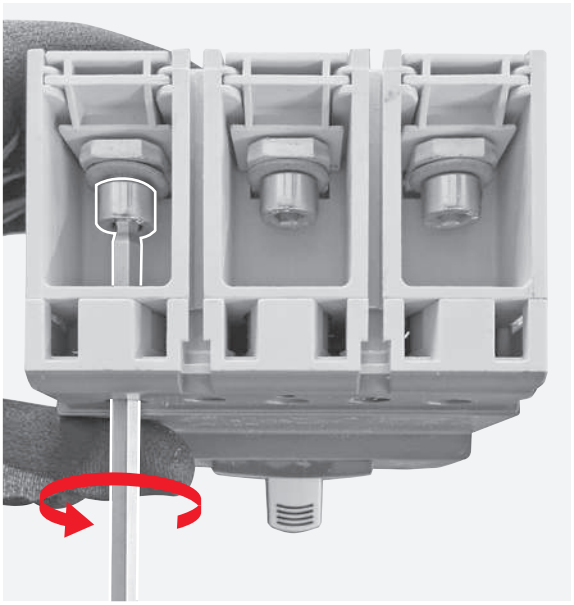

2

Insert the flat screwdriver as shown in the picture 2 and push it up in order to remove the cap kits.

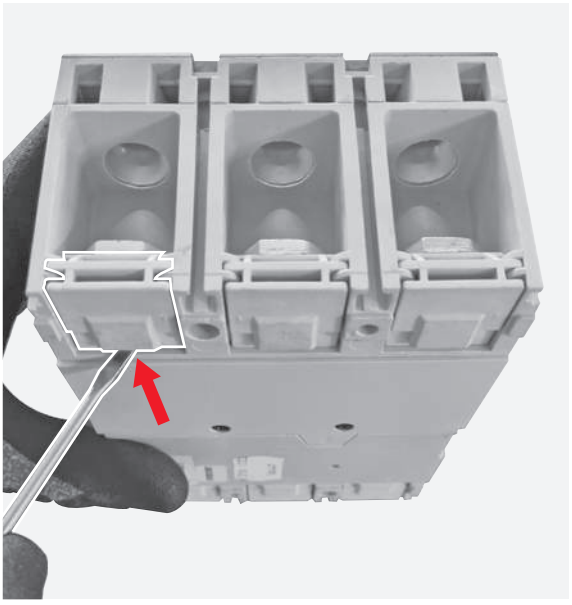

Disassembled parts



- 6 screws and related washers (Metal)
- 6 cap kits (Plastic and Metal) SEPARATE TREATMENT (Thermoplastics containing brominated flame retardants)

6.2 PHASE 2 – FRONTAL

Tools

Cross screwdriver



Actions to be performed

3

By means of the cross screwdriver unscrew the 2 screws fixing the frontal to the circuit breaker main structure.

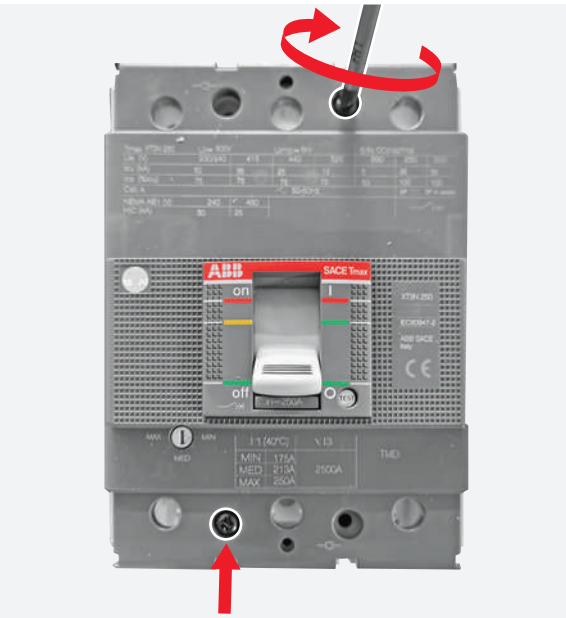

4

Manually remove the frontal together with the 2 fixing screws.

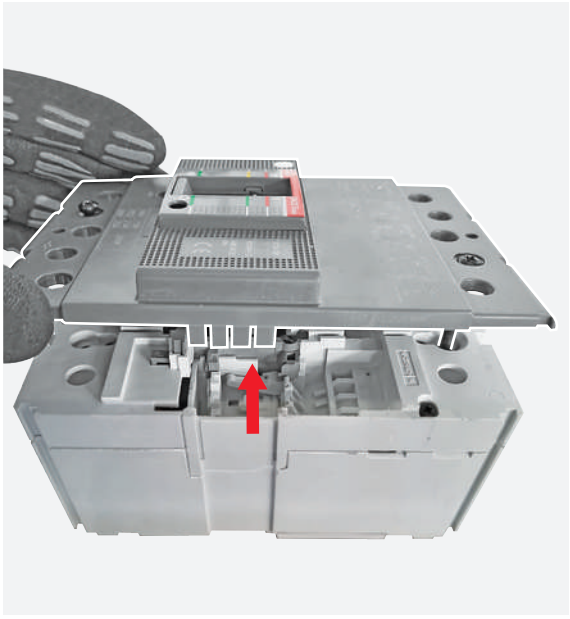

Disassembled parts

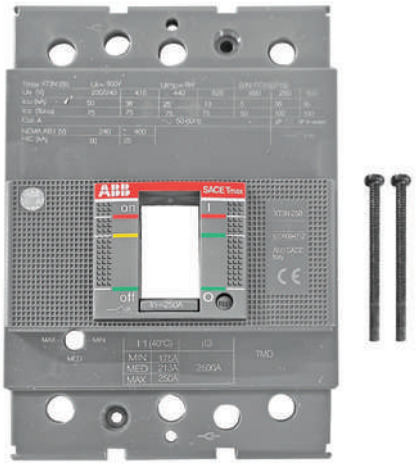

- 1 frontal (Plastic)
- 2 screws (Metal)

6.3 PHASE 3 – TOGGLE

Tools

Pliers

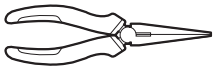

Actions to be performed

5
As preliminary action close the circuit breaker and push the trip test button.

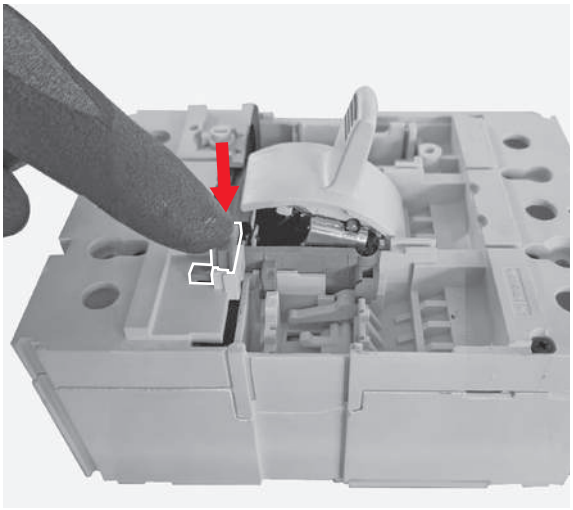

6
Slightly push the toggle towards the bottom part of the circuit breaker.

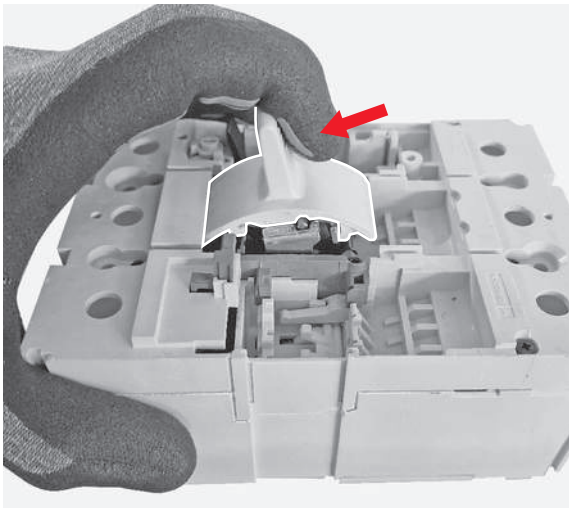

7
By means of the pliers take the upper part of the toggle and remove it.

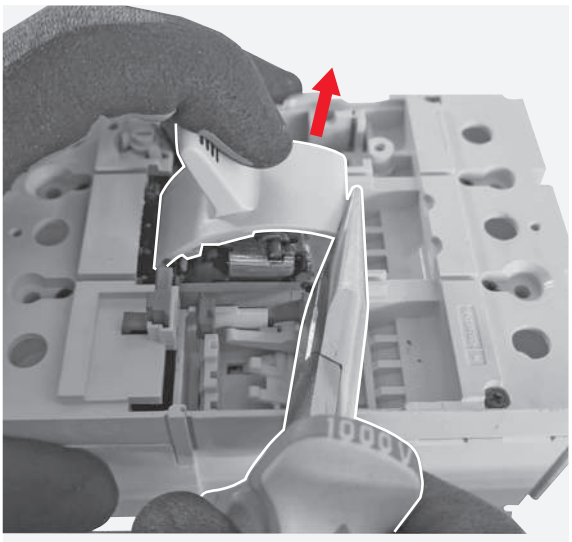

Disassembled parts



- 1 toggle (Plastic)

6.4 PHASE 4 – OPERATING MECHANISM, TRIPPING SHAFT AND TRIP UNIT COVER

Tools

Flat screwdriver



Cross screwdriver



Torx key

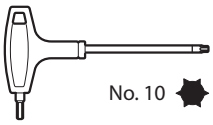

Actions to be performed

8
As preliminary action by means of the flat screwdriver push up the 2 pins located in correspondence of the operating mechanism and after remove the 2 pins.

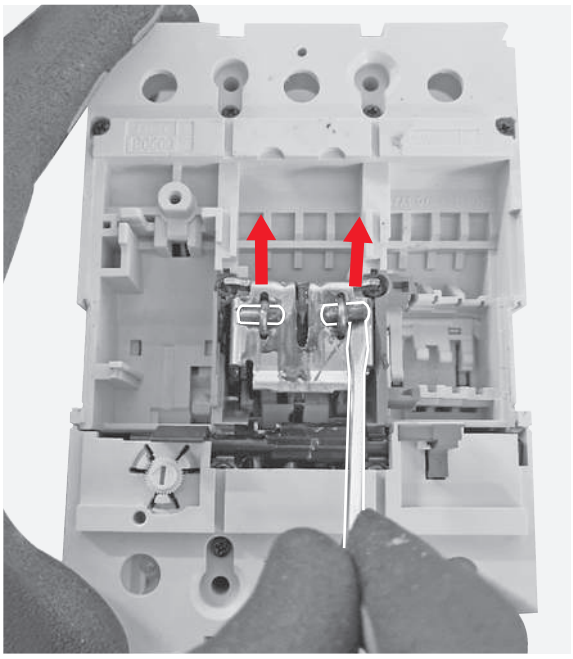

9
By means of the cross screwdriver unscrew the 2 screws fixing the trip unit cover to the circuit breaker main structure and remove the trip unit cover.

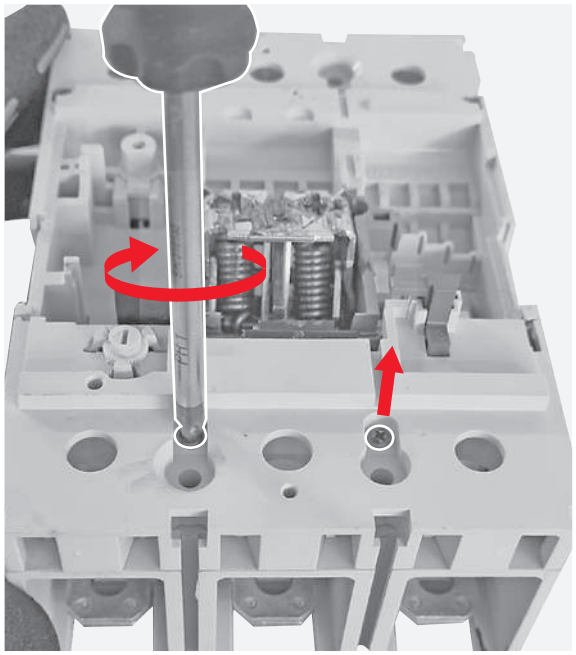

10
By means of the torx key unscrew the 4 screws fixing the operating mechanism to the circuit breaker main structure.

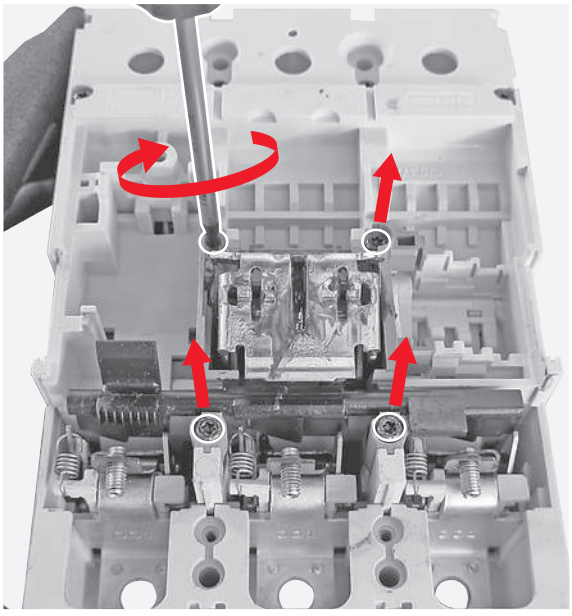

11
Manually remove the operating mechanism together with the tripping shaft.

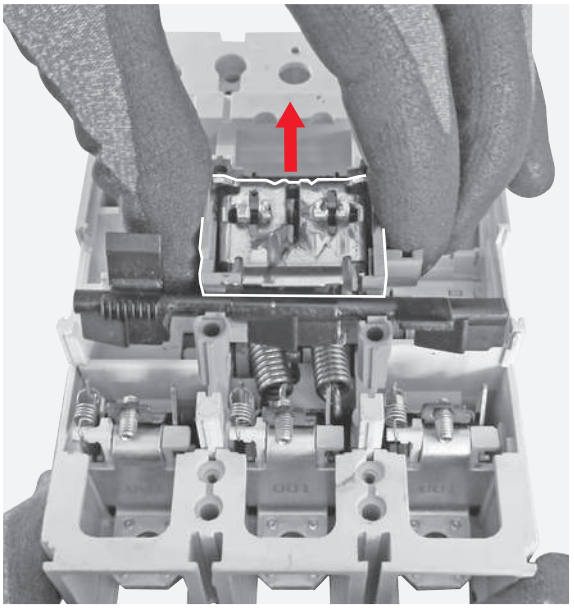

12
Manually remove the tripping shaft from the operating mechanism.

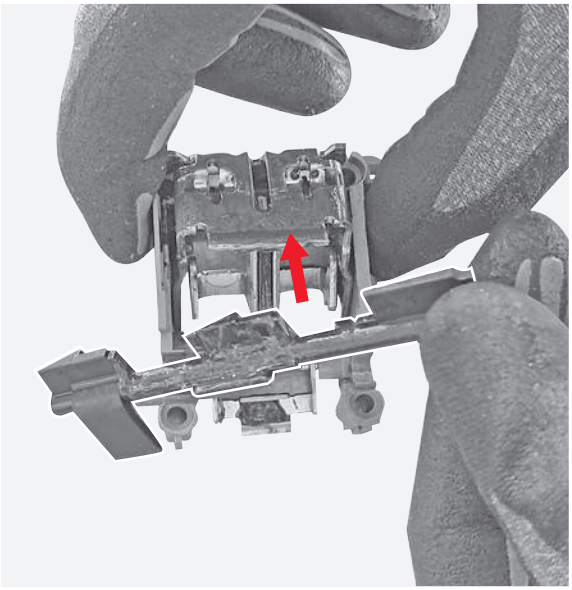

13
Manually remove the trip test button located on the trip unit cover and the spring behind it.

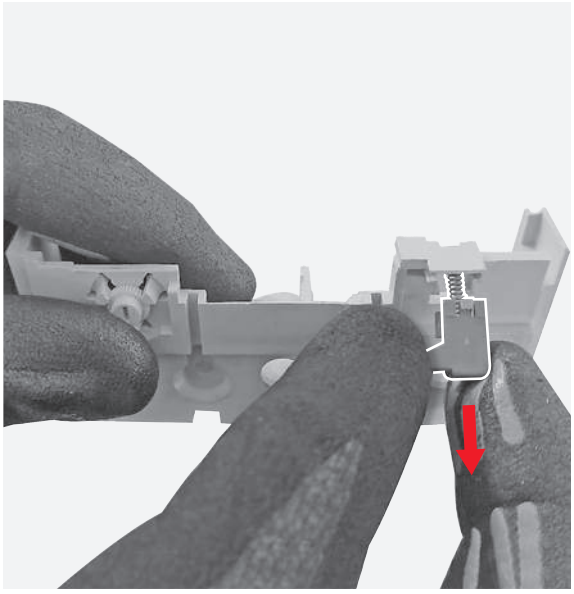

Disassembled parts

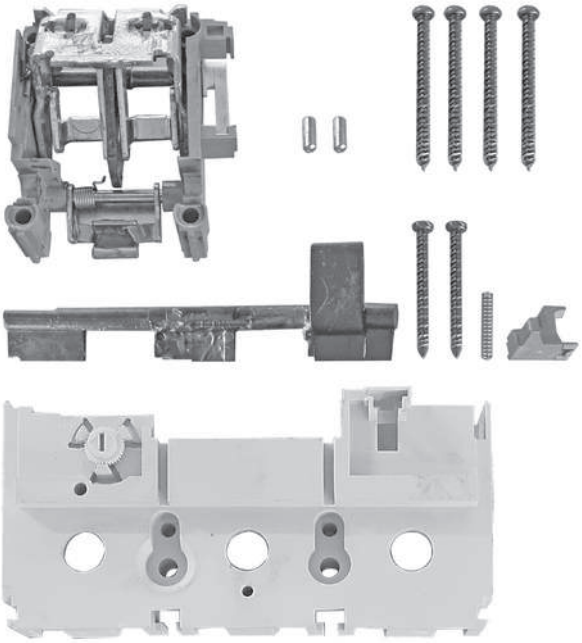

- 2 pins (Metal)
- 2 + 4 screws (Metal)
- 1 trip unit cover with trimmer (Plastic) SEPARATE TREATMENT (Thermoplastics containing brominated flame retardants)
- 1 operating mechanism (Plastic and Metal) SEPARATE TREATMENT (Thermoplastics containing brominated flame retardants)
- 1 tripping shaft (Plastic) SEPARATE TREATMENT (Thermoplastics containing brominated flame retardants)
- 1 trip test button (Plastic)
- 1 spring (Metal)

6.5 PHASE 5 – REMOVAL OF THE CIRCUIT BREAKER COVER

Tools

Cross screwdriver

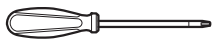

Cutter

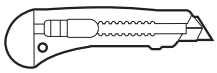

Actions to be performed

14
By means of the cross screwdriver unscrew the 4 screws located in the upper part of the circuit breaker fixing the circuit breaker cover to the circuit breaker base.

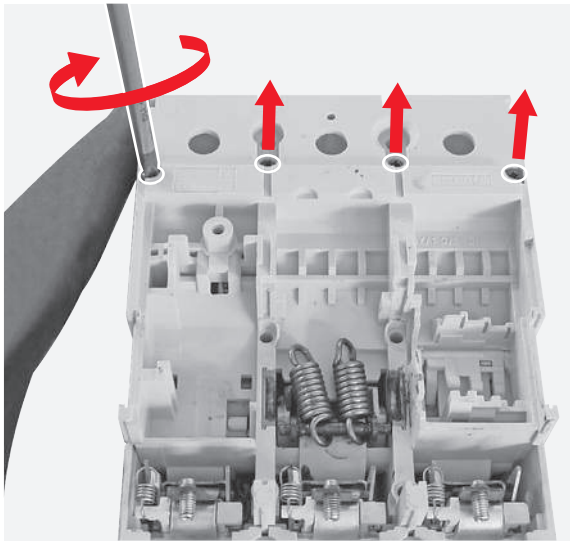

15
By means of the cutter start removing the label located on the left side of the circuit breaker and manually complete the operation

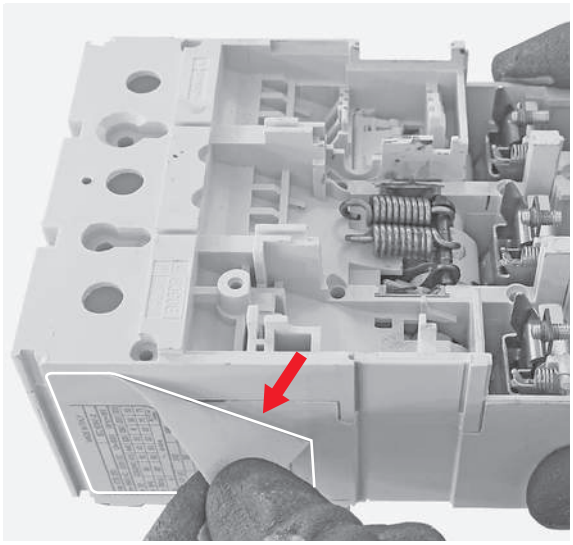

16
Manually lift the circuit breaker cover.

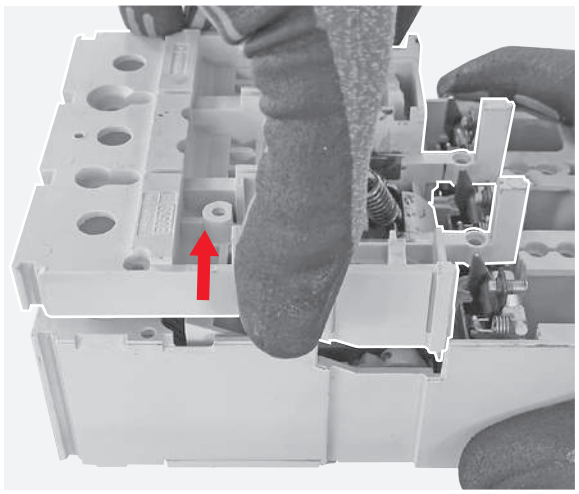

Disassembled parts

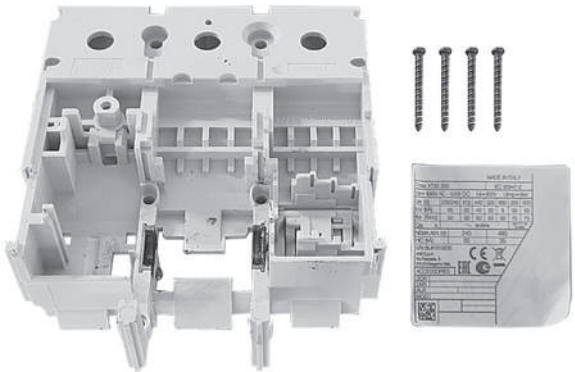

Disassembled parts

- 4 screws (Metal)
- 1 label (Adhesive paper)
- 1 circuit breaker cover (Plastic)

6.6 PHASE 6 – ARCHING CHAMBERS

Tools

Flat screwdriver



Actions to be performed

17

By means of the flat screwdriver push up and remove from the main circuit breaker structure the arching chambers.

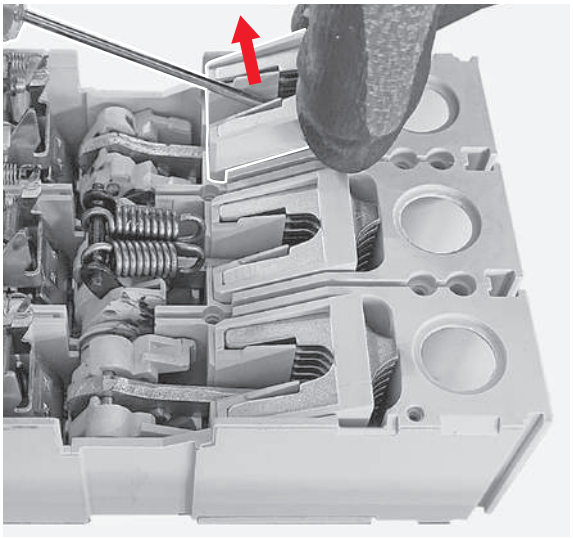

18

By gravity let the metal plates mounted inside the plastic case come out from the plastic case.

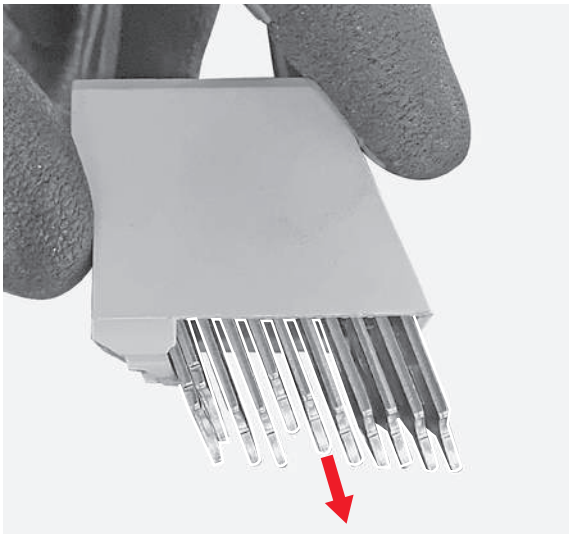

Disassembled parts

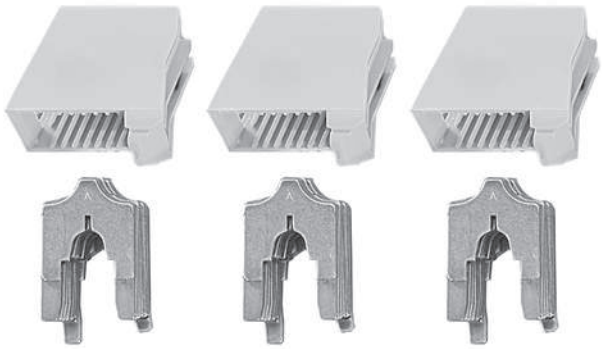

- 6 arching chambers cases (Plastic)
- 33 arching chambers plates (Metal)

6.7 PHASE 7 – MAIN CONTACTS ASSEMBLY

Tools

Flat screwdriver



Actions to be performed

19
By means of the flat screwdriver push up the bottom connection terminals.

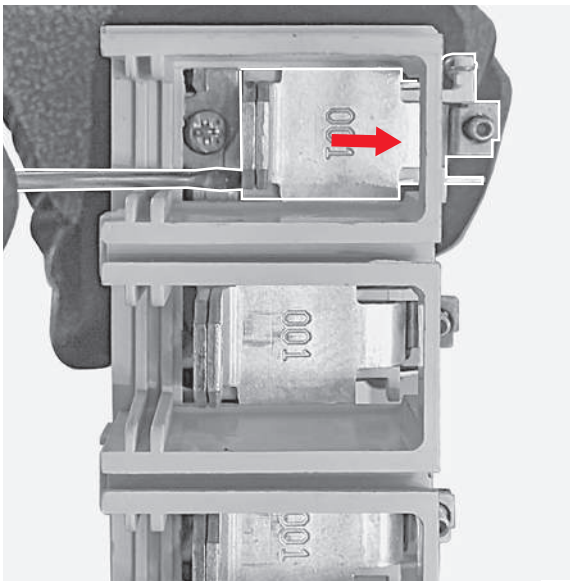

20
Manually lift the bottom connection terminals and after remove the main contacts assembly.

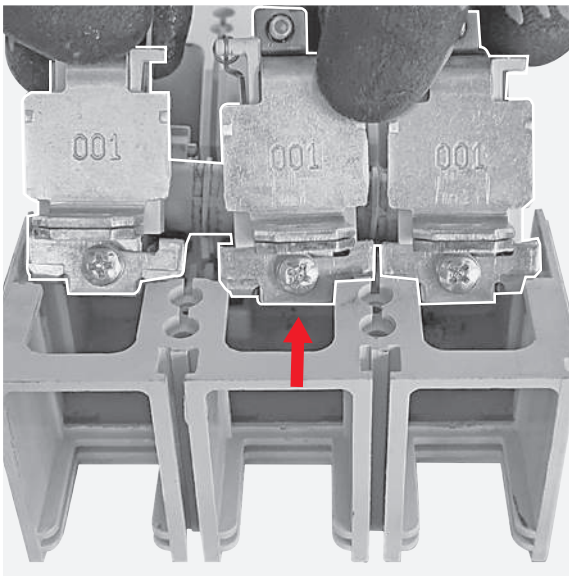

Disassembled parts

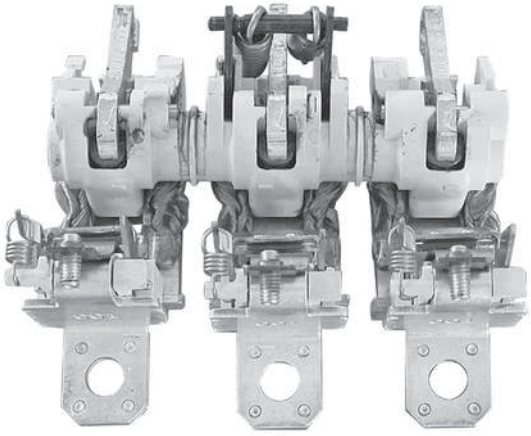

1 main contacts assembly (Plastic and Metal)

6.8 PHASE 8 – UPPER CONNECTION TERMINALS

Tools

Cross screwdriver

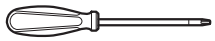

Actions to be performed

21
By means of the cross screwdriver unscrew the 2 screws fixing the rear cover to the circuit breaker base and manually remove the rear cover.

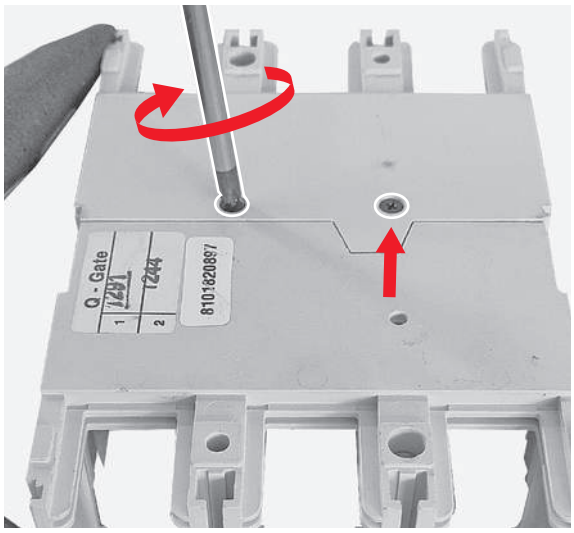

22
By means of the cross screwdriver unscrew the 3 screws fixing the upper connection terminals.

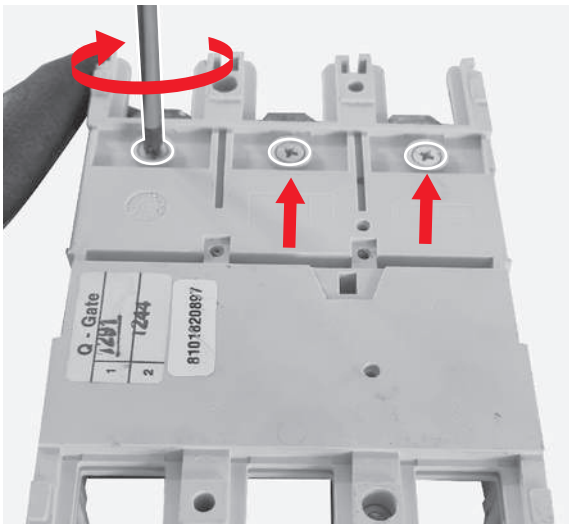

23
Manually remove the upper connection terminals.

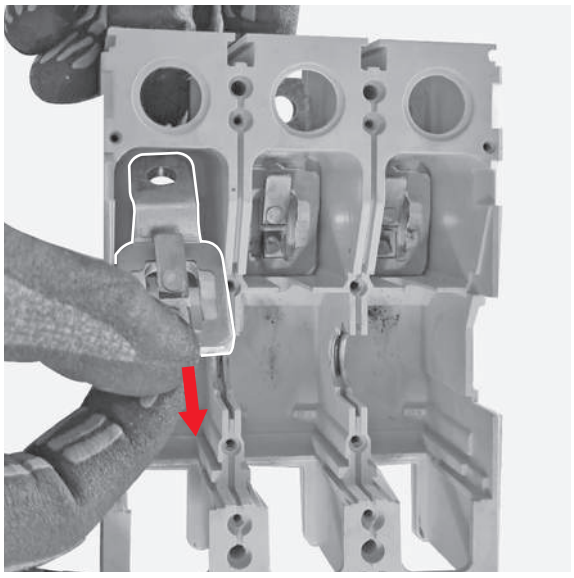

Disassembled parts

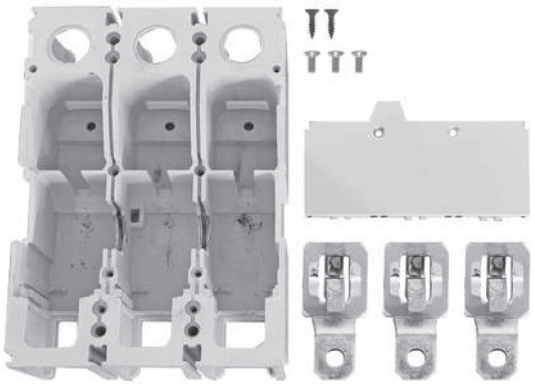

- 2 + 3 screws (Metal)
- 1 rear cover (Plastic) SEPARATE TREATMENT (Thermoplastics containing brominated flame retardants)
- 3 connection terminals (Metal)
- 1 circuit breaker base (Plastic)

7. ENERGY CONSUMPTION FOR CIRCUIT BREAKERS DISASSEMBLY

Since all disassembly operations illustrated in this document are manual, the CO_2 equivalent emissions can be considered null/negligible.

—
ABB SACE
A division of ABB S.p.A.
L.V. Breakers
Via Pescaria 5,
24123 Bergamo - Italy
Phone: +39 035 395.111
Fax: +39 035 395.306-433

abb.it/lowvoltage

© Copyright 2022 ABB. All rights reserved.
Specifications subject to change without notice.

1SDH002294A1001 - ECN000285442