EVW005

Connecting cable with socket

ADOAH040SCS0005T04

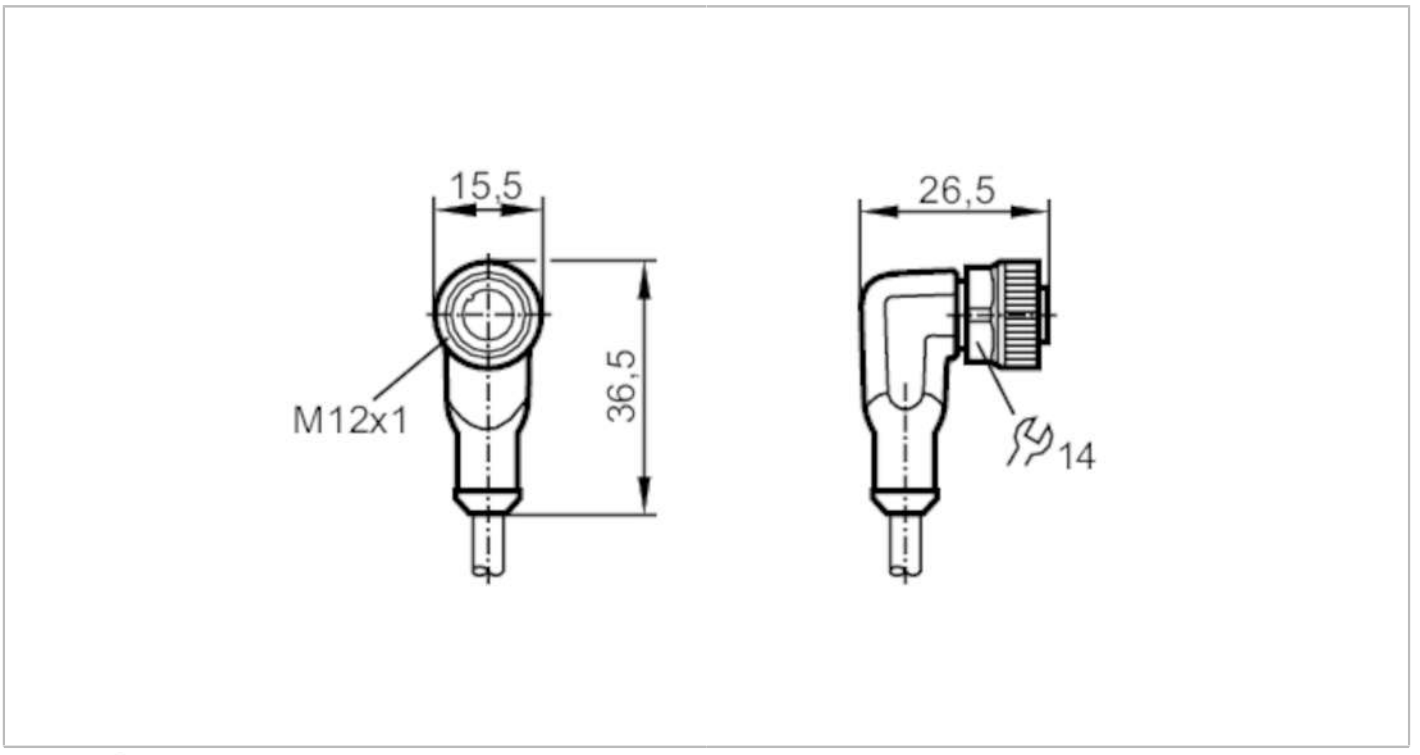

Application						
Application		welding applications				
Free from silicone		yes				
Electrical data						
Operating voltage	[V]	< 250 AC / < 300 DC				
Protection class		II				
Max. current load total	[A]	4				
Operating conditions						
Ambient temperature	[°C]	-25...90				
Note on ambient temperature		cULus: ...75				
Ambient temperature (moving)	[°C]	-25...90				
Note on ambient temperature (moving)		cULus: ...75				
Protection		IP 65; IP 67; IP 68; IP 69K				
Mechanical data						
Weight	[g]	192.4				
Dimensions	[mm]	26.5 x 15.5 x 36.5				
Materials		housing: TPU orange; Sealing: FKM				
Material nut		brass				
Drag chain suitability		bending radius for flexible use	min. 10 x cable diameter			
		travel speed	max. 3.3 m/s for a horizontal travel length of 5 m and			

EVW005

Connecting cable with socket

ADOAH040SCS0005T04

		max. acceleration of 5 m/s²			
	bending cycles		> 2 Mio.		
	torsional strain		± 180 °/m		

Remarks

Pack quantity	1 pcs.

Electrical connection

Cable: 5 m, PUR, Halogen-free, grey, Ø 4.9 mm; not irradiated (can be recycled); 4 x 0.34 mm² (42 x Ø 0.1 mm)

Cable: 5 m, PUR, Halogen-free, grey, Ø 4.9 mm; resistant to welding sparks; 4 x 0.34 mm² (42 x Ø 0.1 mm)

Connector: 1 x M12, angled; Locking: , brass, anti-spatter; Kontakte: gold-plated; Tightening torque: 0.6...1.5

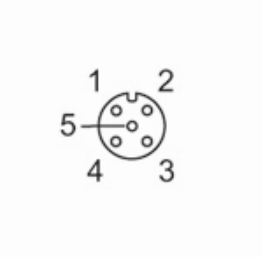

Connection

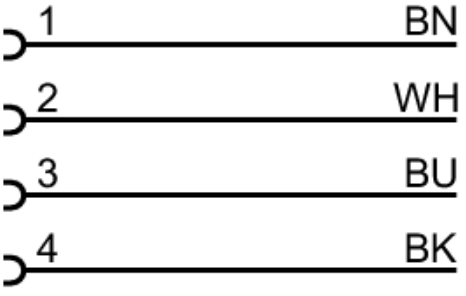

	Core colours :
BK =	black
BN =	brown
BU =	blue
WH =	white