E21254

Reflector for retro-reflective sensors

REFLECTOR TS-30X59

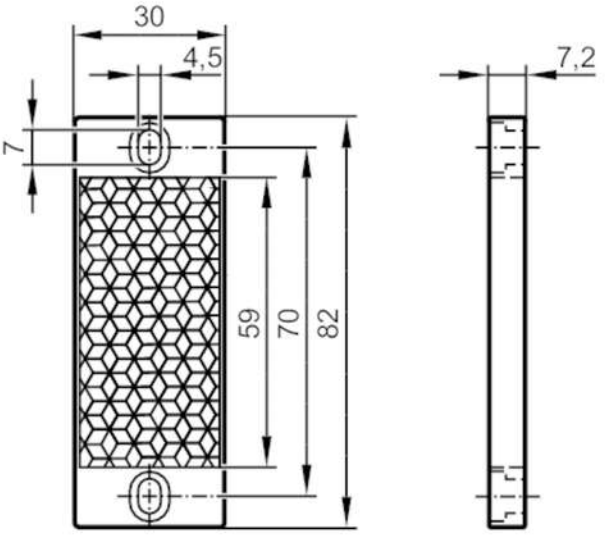

Application		
Design		rectangular, for red light and infrared light retro-reflective sensors
Operating conditions		
Ambient temperature	[°C]	-10...60
Mechanical data		
Weight	[g]	15.7
Dimensions	[mm]	30 x 82 x 7.2
Reflector surface	[mm]	59 x 30
Materials		plastics
Remarks		
Pack quantity		1 pcs.