# EBF010

## Y-splitter

ZDO2H040VAS0000-00STGH050VAS

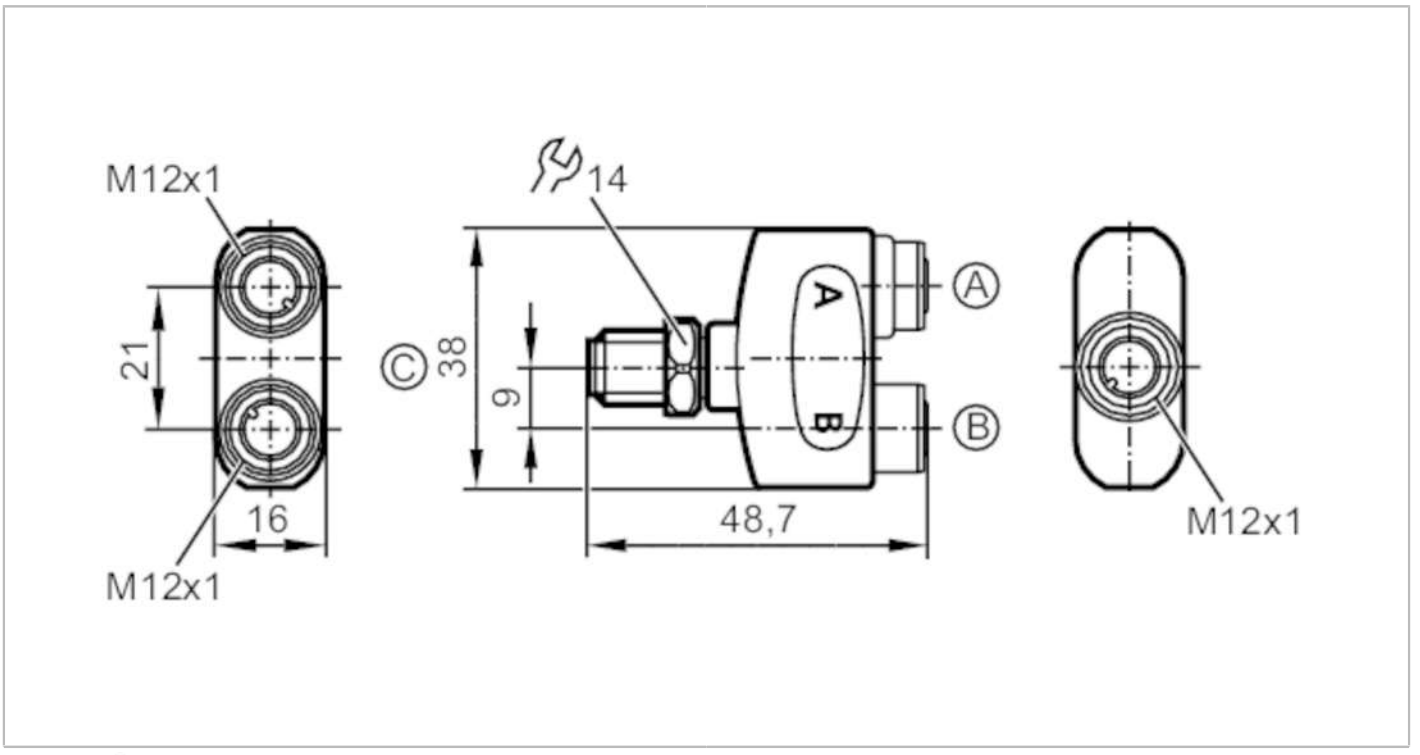


| | | | |
|---|---|---|---|
| **Application** | | | |
| Special feature | | Free from silicone; Gold-plated contacts | |
| Free from silicone | | yes | |
| **Electrical data** | | | |
| Operating voltage | [V] | < 60 AC/DC;  (cULus: 30 AC / 42 DC) | |
| Protection class | | II | |
| Max. current load per module/slot | [A] | 4 | |
| Max. current load total | [A] | 4 | |
| **Operating conditions** | | | |
| Ambient temperature | [°C] | -25...100 | |
| Note on ambient temperature | | cULus: ...65 °C | |
| Storage temperature | [°C] | -25...55 | |
| Storage humidity | [%] | 10...100 | |
| Other climatic conditions for storage according to stated class | | 1K22/ DIN 60721-3-1 | |
| Protection | | IP 65; IP 67; IP 68; IP 69K | |
| **Tests / approvals** | | | |
| UL approval | | power supply | Class 2 |
| | | File number UL | E191684 |
| **Mechanical data** | | | |
| Weight | [g] | 56.3 | |
| Materials | | housing: PA Halogen-free; Sealing: EPDM | |

# EBF010

## Y-splitter

ZDO2H040VAS0000-00STGH050VAS

| | |
|---|---|
| Moulded-body material | PA, Halogen-free |
| Material nut | stainless steel (1.4404 / 316L) |

### Remarks

| | |
|---|---|
| Pack quantity | 1 pcs. |

### Electrical connection - plug

Connector: 1 x M12; coding: A; Moulded body: PA, Halogen-free; Locking: stainless steel (1.4404 / 316L); Contacts: gold-plated; Tightening torque: 0.6...1.2 Nm

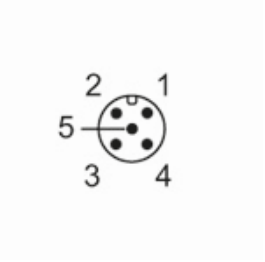


### Connection

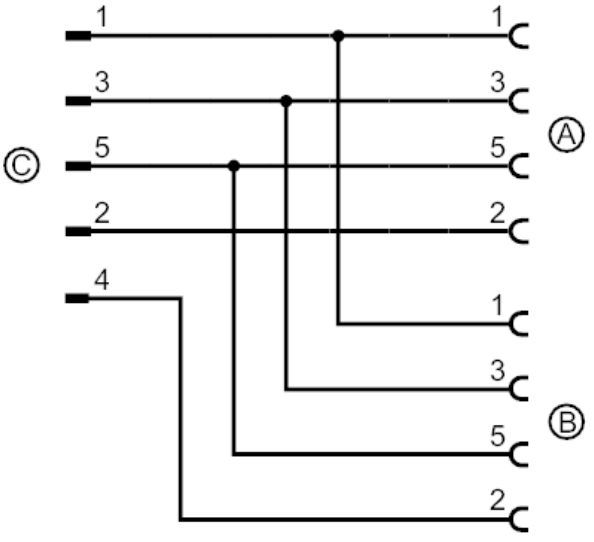


connection to IEC 61076-2-101

### Electrical connection - socket

Connector: 2 x M12; coding: A; Moulded body: PA, Halogen-free; Locking: stainless steel (1.4404 / 316L); Contacts: gold-plated; Tightening torque: 0.6...1.5 Nm

