PG2793

Flush pressure sensor with analogue display

PG-025-REA01-MFRKG/US/ /P

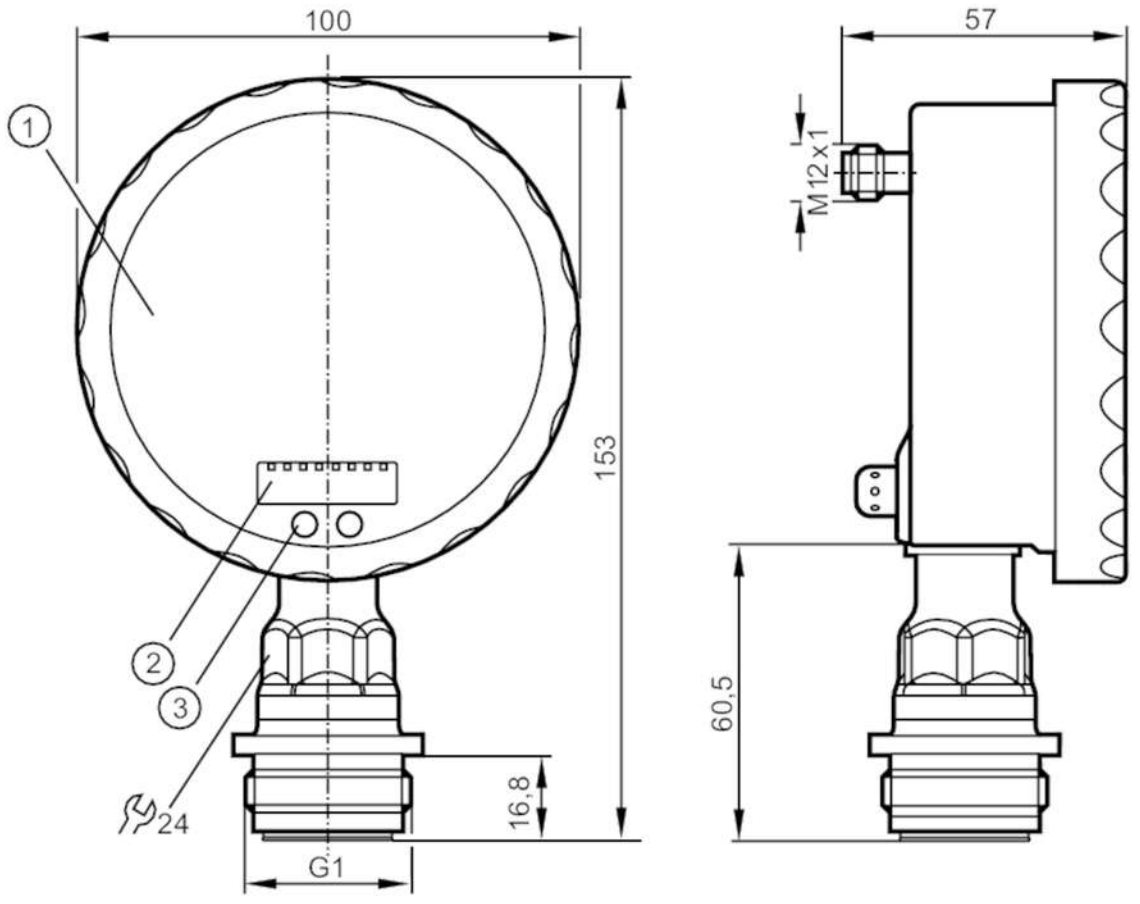

1 analogue display
2 alphanumeric display 4-digit
3 sensor field (programming button)

3A ACS CE CRN cULus LISTED EC 1935/2004 EHEDG Certified FCM FDA Reg31 S UKCA

Product characteristics			
Number of inputs and outputs	Number of digital outputs: 1; Number of analogue outputs: 1		
Measuring range	-1...25 bar	-14.4...362.7 psi	
Process connection	threaded connection G 1 external thread Aseptoflex Vario		

Application			
Special feature	Gold-plated contacts		
Application	flush mountable for the food and beverage industry		
Media	viscous media and liquids with suspended particles; liquids and gases		
Medium temperature [°C]	-25...125; (145 max. 1h)		
Min. bursting pressure	350 bar	5070 psi	35 MPa
Pressure rating	100 bar	1450 psi	10 MPa
Type of pressure	relative pressure; vacuum		
No dead space	yes		
MAWP (for applications according to CRN) [bar]	60		

PG2793

Flush pressure sensor with analogue display

PG-025-REA01-MFRKG/US/ /P

Electrical data			
Operating voltage	[V]	18...32 DC	
Current consumption	[mA]	< 70; (24 V)	
Min. insulation resistance	[MΩ]	100; (500 V DC)	
Protection class		III	
Reverse polarity protection		yes	
Power-on delay time	[s]	6	
Integrated watchdog		yes	
Inputs / outputs			
Number of inputs and outputs		Number of digital outputs: 1; Number of analogue outputs: 1	
Outputs			
Total number of outputs		2	
Output signal		switching signal; analogue signal; (configurable)	
Electrical design		PNP/NPN	
Number of digital outputs		1	
Output function		normally open / normally closed; (parameterisable)	
Max. voltage drop switching output DC	[V]	2	
Permanent current rating of switching output DC	[mA]	250	
Switching frequency DC	[Hz]	50	
Number of analogue outputs		1	
Analogue current output	[mA]	4...20, invertible; (scalable)	
Max. load	[Ω]	(Ub - 10 V) / 20 mA	
Short-circuit protection		yes	
Type of short-circuit protection		pulsed	
Overload protection		yes	
Measuring/setting range			
Measuring range		-1...25 bar	-14.4...362.7 psi
Set point SP		-0.96...40 bar	-13.8...580.2 psi
Reset point rP		-1...39.96 bar	-14.4...579.6 psi
Analogue start point		-1...33.76 bar	-14.4...489.6 psi
Analogue end point		5.24...40 bar	75.9...580.2 psi
In steps of		0.02 bar	0.3 psi
Accuracy / deviations			
Switch point accuracy	[% of the span]	< ± 0,2; (Turn down 1:1)	
Repeatability	[% of the span]	< ± 0,1; (with temperature fluctuations < 10 K; Turn down 1:1)	
Characteristics deviation	[% of the span]	< ± 0,2; (Turn down 1:1 , linearity, incl. hysteresis and repeatability , limit value setting to DIN EN IEC 62828-1)	
Linearity deviation	[% of the span]	< ± 0,15; (Turn down 1:1)	
Hysteresis deviation	[% of the span]	< ± 0,15; (Turn down 1:1)	
Long-term stability		< ± 0,1; (Turn down 1:1; per year)	

PG2793

Flush pressure sensor with analogue display

PG-025-REA01-MFRKG/US/ /P

[% of the span]			
Temperature coefficient zero point [% of the span / 10 K]		< ± 0,05; (0...70 °C)	
Temperature coefficient span [% of the span / 10 K]		< ± 0,15; (0...70 °C)	
Response times			
Response time	[ms]	< 10	
Damping process value dAP	[s]	0.01...30	
Damping for the analogue output dAA	[s]	0.01...30	
Step response time analogue output	[ms]	25	
Operating conditions			
Ambient temperature	[°C]	-25...80	
Storage temperature	[°C]	-40...100	
Protection		IP 67; IP 69K	
Tests / approvals			
EMC		EN 61000-4-2 ESD	4 kV CD / 8 kV AD
		EN 61000-4-3 HF radiated	10 V/m
		EN 61000-4-4 Burst	2 kV
		EN 61000-4-5 Surge	0,5/1 kV
		EN 61000-4-6 HF conducted	10 V
Shock resistance		DIN IEC 68-2-27	50 g (11 ms)
Vibration resistance		DIN IEC 68-2-6	20 g (10...2000 Hz)
MTTF	[years]	100	
Note on approval		factory certificate available as download at www.factory-certificate.ifm	
Mechanical data			
Weight	[g]	521.45	
Dimensions	[mm]	153 x 100 x 57	
Materials		stainless steel (316L/1.4404); PA; FKM; PTFE; viewing glass: laminated safety glass 4 mm	
Materials (wetted parts)		ceramics (99.9 % Al2O3); stainless steel (316L/1.4435); surface characteristics: Ra < 0,4 / Rz 4; PTFE	
Min. pressure cycles		100 million	
Process connection		threaded connection G 1 external thread Aseptoflex Vario	
Displays / operating elements			
Display		Display unit	2 x LED, green
		switching status	LED, yellow
		switch points	LED ring, red
		function display	alphanumeric display, red 4-digit
		measured values	analogue display, 0...350° rotatable, pointer not visible when unit disconnected
		measured values	alphanumeric display, red 4-digit
With scale		yes	
Extended display range (max.)		40 bar	580.2 psi

PG2793

Flush pressure sensor with analogue display

PG-025-REA01-MFRKG/US/ /P

Remarks	
Remarks	characteristics deviation in the extended display range: 1.5 % of the span
	switch point accuracy in the extended display range: 1.5 % of the span
Pack quantity	1 pcs.

Electrical connection

Connector: 1 x M12; coding: A; Contacts: gold-plated



Connection

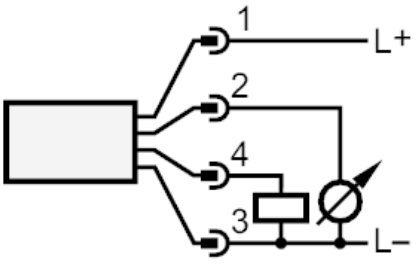

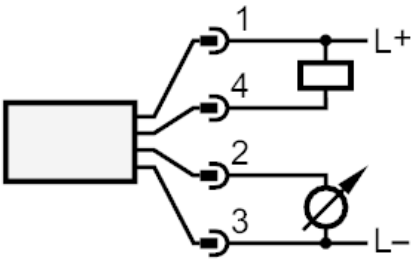

OUT1	switching output
OUT2	analogue output