OGH200

Diffuse reflection sensor with background suppression

OGH-HPKG/US100

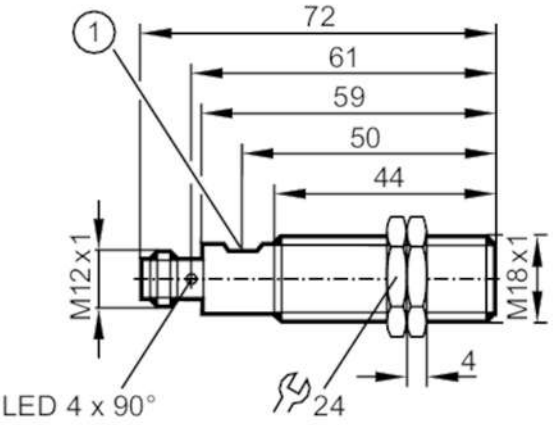

1 potentiometer

Product characteristics		
Type of light		red light
Housing		threaded type
Application		
Special feature		Background suppression
Function principle		Diffuse reflection sensor
Electrical data		
Operating voltage	[V]	10...36 DC
Current consumption	[mA]	25
Protection class		II
Reverse polarity protection		yes
Type of light		red light
Wave length	[nm]	624
Outputs		
Electrical design		PNP
Output function		light-on mode
Max. voltage drop switching output DC	[V]	2.5
Permanent current rating of switching output DC	[mA]	200
Switching frequency DC	[Hz]	1000
Short-circuit protection		yes
Type of short-circuit protection		pulsed
Overload protection		yes
Detection zone		
Range	[mm]	15...250; (white paper 200 x 200 mm 90% remission)
Range on white object (90 % remission)	[mm]	15...250
Range on grey object (18 % remission)	[mm]	15...230

OGH200

Diffuse reflection sensor with background suppression

OGH-HPKG/US100

Range on black object (6 % remission)	[mm]	15...160	
Range adjustable		yes	
Max. light spot diameter	[mm]	21	
Light spot dimensions refer to		at maximum range	
Background suppression available		yes	
Operating conditions			
Ambient temperature	[°C]	-25...60	
Protection		IP 65	
Tests / approvals			
EMC		EN 60947-5-2	
MTTF	[years]	339	
Mechanical data			
Weight	[g]	53.1	
Housing		threaded type	
Dimensions	[mm]	M18 x 1 / L = 72	
Thread designation		M18 x 1	
Materials		housing: stainless steel; operator interface: TPE	
Lens material		PMMA	
Displays / operating elements			
Display		switching status	1 x LED, yellow
Operating elements			potentiometer
Accessories			
Items supplied		lock nuts: 2	
Remarks			
Remarks		operating voltage "supply class 2" according to cULus	
Pack quantity		1 pcs.	
Electrical connection			

Connector: 1 x M12; coding: A



OGH200

Diffuse reflection sensor with background suppression

OGH-HPKG/US100

Connection

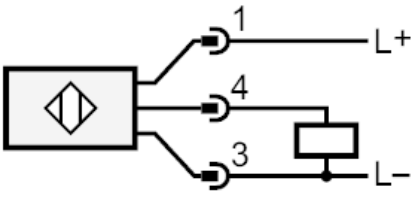

Diagrams and graphs

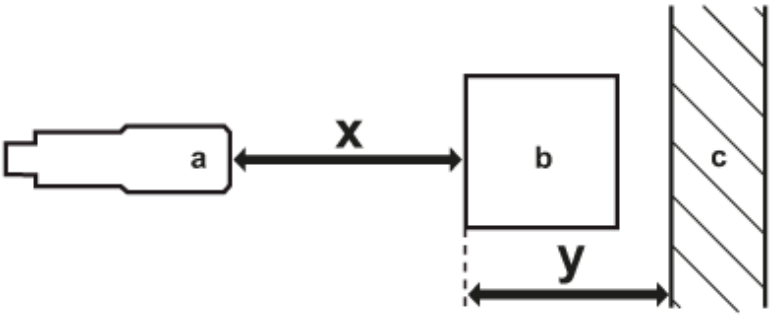

a: sensor

b: object

c: background

x: distance sensor/object [mm]

y: min. distance object/background [mm]

OGH200

Diffuse reflection sensor with background suppression

OGH-HPKG/US100

accuracy graph

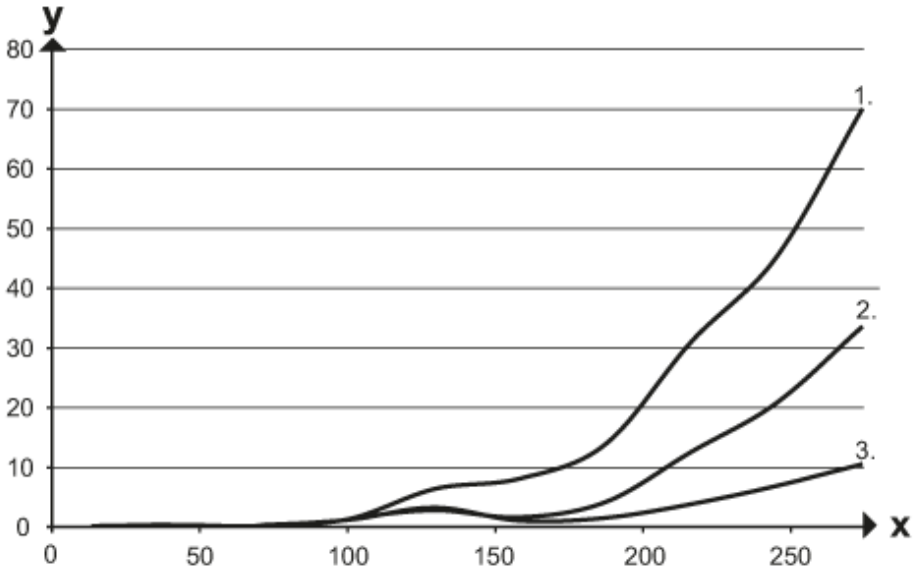

x: distance sensor/object [mm]

y: min. distance object/background [mm]

1 = object black (6 % remission) , background white (90 % remission)

2 = object grey (18 % remission) , background white (90 % remission)

3 = object white (90 % remission) , background white (90 % remission)