SM2100

Magnetic-inductive flow meter

SMR21XGXFRKG/US

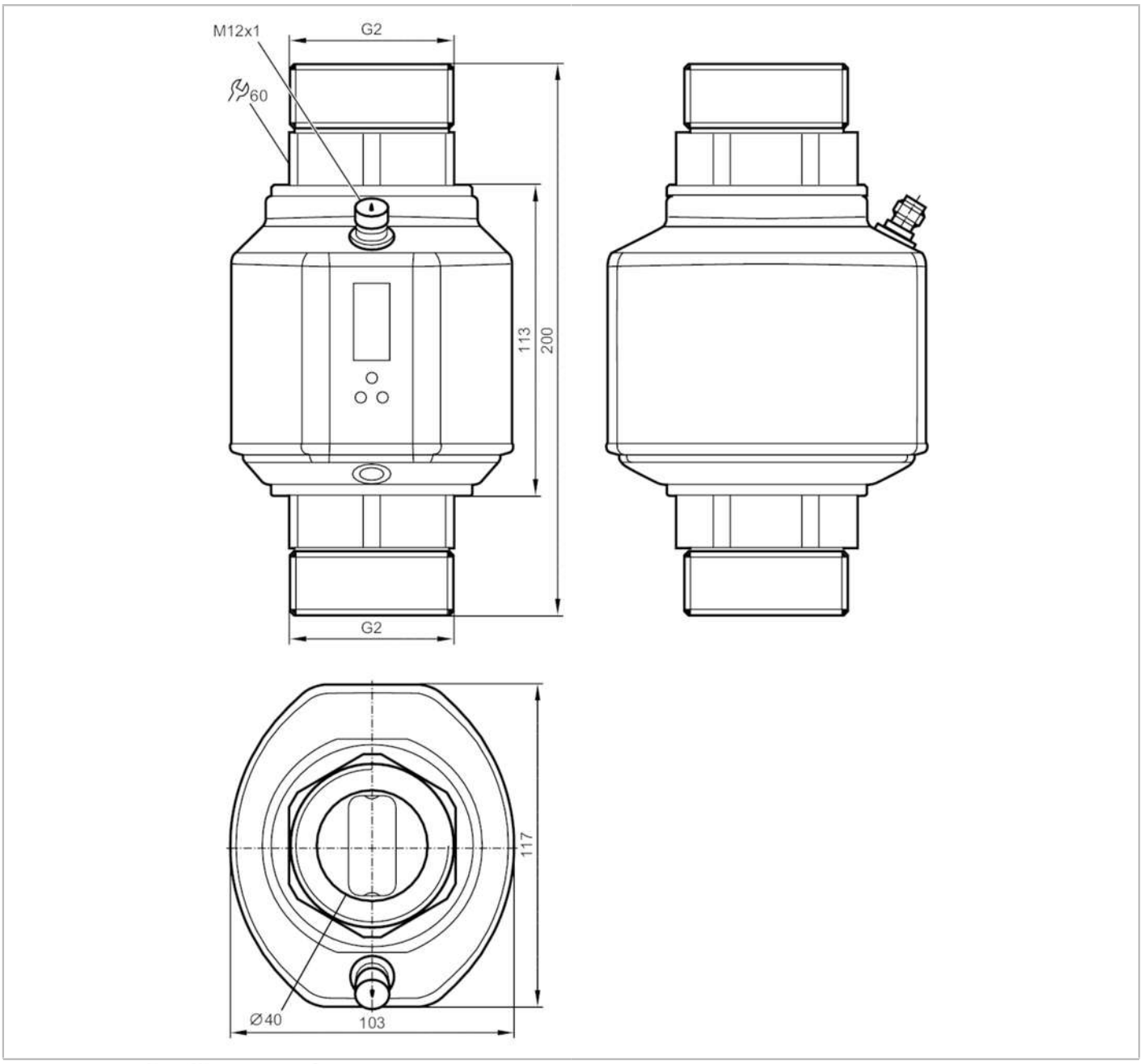

ACS CE PA CRN cULus LISTED IO-Link KTW/W270 Reg31 UKCA

Product characteristics		
Number of inputs and outputs	Number of digital outputs: 2; Number of analogue outputs: 1	
Measuring range	5...600 l/min	0.3...36 m³/h
Process connection	threaded connection G 2 external thread DN50 flat seal	

Application	
Special feature	Gold-plated contacts
Application	totaliser function; empty pipe detection; for industrial applications
Installation	connection to pipe by means of an adapter
Media	conductive liquids; water; hydrous media

SM2100

Magnetic-inductive flow meter

SMR21XGXFRKG/US

Note on media		conductivity: ≥ 20 µS/cm	
		viscosity: < 70 mm²/s (40 °C)	
Medium temperature	[°C]	-10...90	
Pressure rating		16 bar	1.6 MPa
MAWP (for applications according to CRN)	[bar]	16	
Electrical data			
Operating voltage	[V]	18...32 DC; (to SELV/PELV)	
Current consumption	[mA]	< 150	
Protection class		III	
Reverse polarity protection		yes	
Power-on delay time	[s]	5	
Measuring principle		magnetic-inductive	
Inputs / outputs			
Number of inputs and outputs		Number of digital outputs: 2; Number of analogue outputs: 1	
Inputs			
Inputs		counter reset	
Outputs			
Total number of outputs		2	
Output signal		switching signal; analogue signal; pulse signal; frequency signal; IO-Link; (configurable)	
Electrical design		PNP/NPN	
Number of digital outputs		2	
Output function		normally open / normally closed; (parameterisable)	
Max. voltage drop switching output DC	[V]	2	
Permanent current rating of switching output DC	[mA]	250; (per output)	
Number of analogue outputs		1	
Analogue current output	[mA]	4...20; (scalable)	
Max. load	[Ω]	500	
Analogue voltage output	[V]	0...10; (scalable)	
Min. load resistance	[Ω]	2000	
Pulse output		flow rate meter	
Short-circuit protection		yes	
Type of short-circuit protection		pulsed	
Overload protection		yes	
Frequency of the output	[Hz]	0.1...10000	
Measuring/setting range			
Measuring range		5...600 l/min	0.3...36 m³/h
Display range		-720...720 l/min	-43.2...43.2 m³/h
Resolution		0.5 l/min	0.02 m³/h
Set point SP		8...600 l/min	0.5...36 m³/h
Reset point rP		5...597 l/min	0.3...35.8 m³/h
Analogue start point ASP		0...480 l/min	0...28.8 m³/h
Analogue end point AEP		120...600 l/min	7.2...36 m³/h

SM2100

Magnetic-inductive flow meter

SMR21XGXFRKG/US

Low flow cut-off LFC		< 15 l/min	< 0.9 m³/h
In steps of		0.5 l/min	0.02 m³/h
Measuring dynamics		1:120	
Volumetric flow quantity monitoring			
Pulse value		0.0001...600 x 10³ m³	
In steps of		0.0001 m³	
Pulse length	[s]	0,008...2	
Temperature monitoring			
Measuring range	[°C]	-20...80	
Display range	[°C]	-40...100	
Resolution	[°C]	0.2	
Set point SP	[°C]	-19.2...80	
Reset point rP	[°C]	-19.6...79.6	
Analogue start point	[°C]	-20...60	
Analogue end point	[°C]	0...80	
In steps of	[°C]	0.2	
Accuracy / deviations			
Flow monitoring			
Accuracy (in the measuring range)		± (0,8 % MW + 0,5 % MEW)	
Repeatability		± 0,2% MEW	
Temperature monitoring			
Temperature drift		± 0,0333 °C / K	
Accuracy	[K]	± 1 (bei 25 °C, Q > 15 l/min)	
Response times			
Flow monitoring			
Response time	[s]	0.35; (dAP = 0)	
Delay time programmable dS, dr	[s]	0...50	
Damping process value dAP	[s]	0...5	
Temperature monitoring			
Dynamic response T05 / T09	[s]	T09 = 3 (Q > 15 l/min)	
Software / programming			
Parameter setting options		Flow monitoring; quantity meter; Preset counter; Temperature monitoring; hysteresis / window; normally open / normally closed; switching logic; current/voltage/frequency/ pulse output; start-up delay; display can be deactivated; Display unit; empty pipe detection	
Interfaces			
Communication interface		IO-Link	
Transmission type		COM2 (38,4 kBaud)	
IO-Link revision		1.1	
SDCI standard		IEC 61131-9 CDV	
Profiles		Smart Sensor: Process Data Variable; Device Identification	
SIO mode		yes	
Required master port type		A	

SM2100

Magnetic-inductive flow meter

SMR21XGXFRKG/US

Process data analogue		3	
Process data binary		2	
Min. process cycle time	[ms]	5	
Supported DeviceIDs		**Type of operation**	**DeviceID**
		default	389
Operating conditions			
Ambient temperature	[°C]	-10...60	
Storage temperature	[°C]	-25...80	
Protection		IP 65; IP 67	
Tests / approvals			
EMC		DIN EN 60947-5-9	
CPA approval		model number	004MI
		accuracy class	-
		maximum allowable error	± 1,5 % FS
		Q (min)	0,3 m³/h
		Q (t)	-
		Q (max)	36 m³/h
		Medium temperature	-10...70°C
Shock resistance		DIN EN 60068-2-27	20 g (11 ms)
Vibration resistance		DIN EN 60068-2-6	5 g (10...2000 Hz)
MTTF	[years]	85	
UL approval		UL Approval no.	I008
		File number UL	E174189
Pressure Equipment Directive		Sound engineering practice; can be used for group 2 fluids; group 1 fluids on request	
Mechanical data			
Weight	[g]	3163	
Housing		rectangular	
Dimensions	[mm]	200 x 103 x 117	
Materials		stainless steel (316L/1.4404); stainless steel (316Ti/1.4571); PEI; FKM; PBT-GF20; TPE-U	
Materials (wetted parts)		stainless steel (316L/1.4404); stainless steel (316Ti/1.4571); PEEK; Centellen; EPDM	
Process connection		threaded connection G 2 external thread DN50 flat seal	
Displays / operating elements			
Display		Display unit	6 x LED, green (l/min, m³/h, l, m³, 10³, °C)
		switching status	2 x LED, yellow
		measured values	alphanumeric display, 4-digit
		programming	alphanumeric display, 4-digit
Accessories			
Items supplied		sealings: 2, Centellen	
		Label	
Remarks			
Remarks		MW = measured value	
		MEW = Final value of the measuring range	
Pack quantity		1 pcs.	

SM2100

Magnetic-inductive flow meter

SMR21XGXFRKG/US

Electrical connection

Connector: 1 x M12; coding: A; Contacts: gold-plated

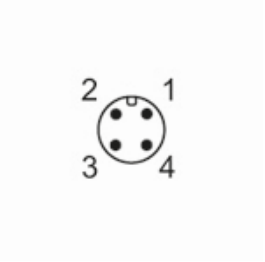

Connection

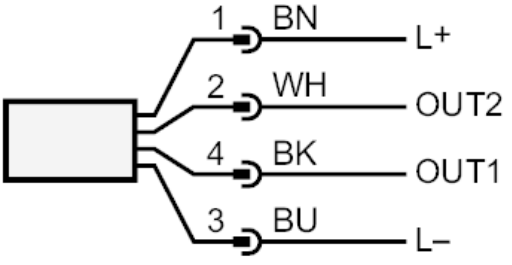

	colours to DIN EN 60947-5-2
OUT1:	switching output empty pipe detection
	switching output volumetric flow quantity monitoring
	frequency output volumetric flow quantity monitoring
	Pulse output quantity meter
	signal output Preset counter
	IO-Link
OUT2:	switching output empty pipe detection
	switching output volumetric flow quantity monitoring
	switching output Temperature monitoring
	analogue output volumetric flow quantity monitoring
	analogue output Temperature monitoring
	input counter reset
	Core colours :
BK =	black
BN =	brown
BU =	blue
WH =	white

SM2100

Magnetic-inductive flow meter

SMR21XGXFRKG/US

Diagrams and graphs

Pressure loss

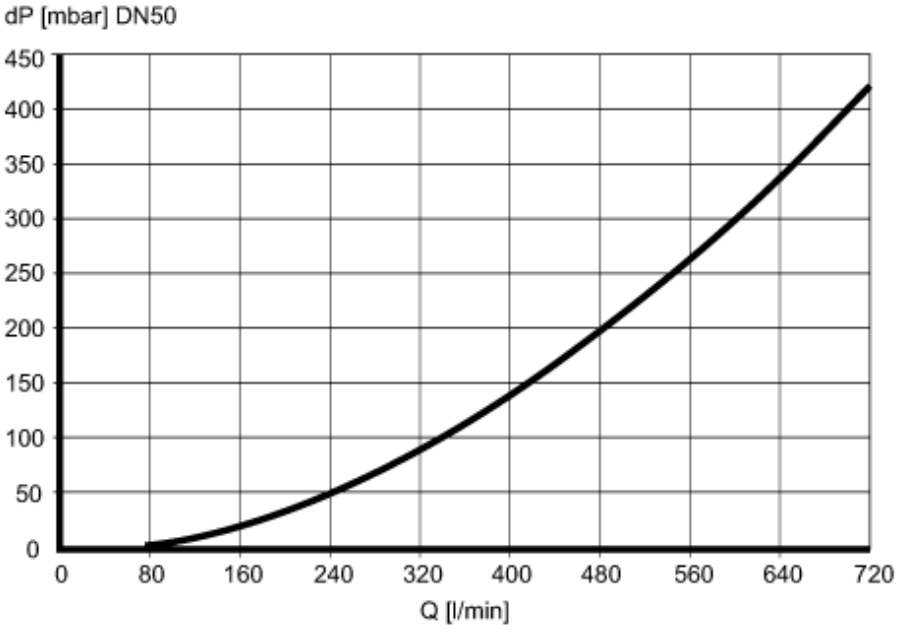

dP Pressure loss

Q volumetric flow quantity