E40102

T-piece with progressive ring fitting

T-PIECE G1/2-18-G1/2

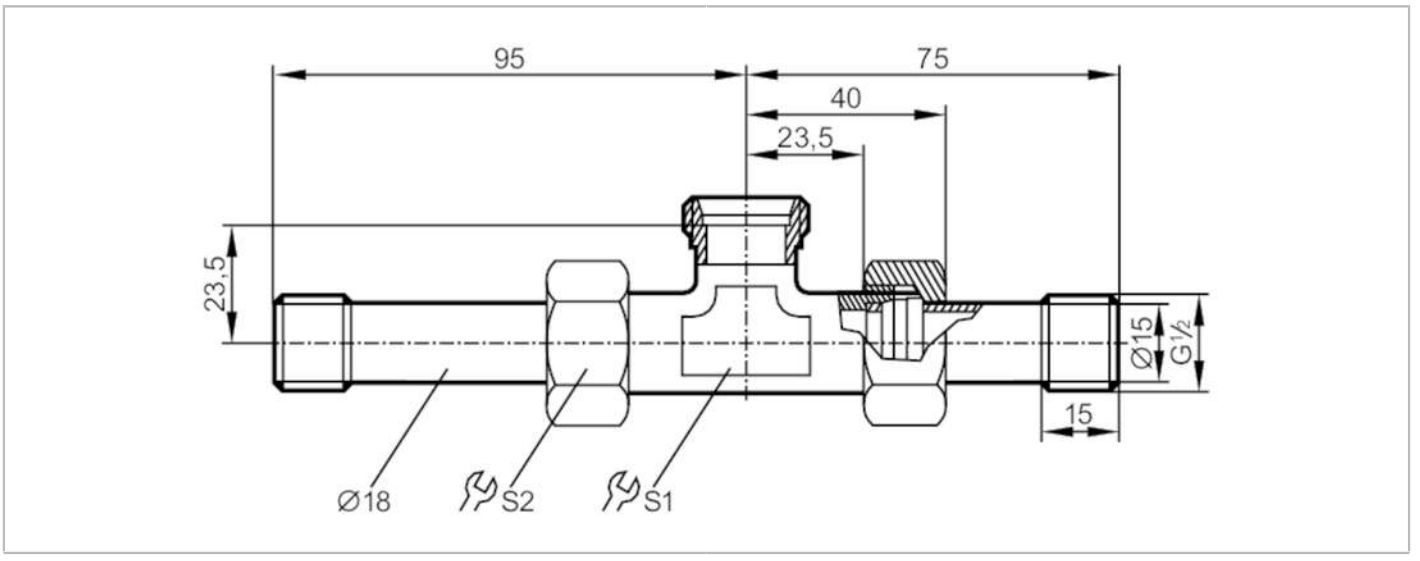

Application		
Design		for sensors and adapters with process connection M26x1,5
Application		for industrial applications
Media		liquids and gases
Pressure rating	[bar]	300
Tests / approvals		
Pressure Equipment Directive		A possible classification to PED depends on the application and has to be carried out by the user / operator.
Pressure Equipment Directive EAC		The adapter is intended for use in devices, machines and installations that do not fall under the categories of the technical rule TR CU 032/2013.
Safety instructions		The compatibility between medium and product material has to be checked in all applications.
Mechanical data		
Weight	[g]	378.8
Materials		stainless steel (1.4571/316Ti)
Sensor connection		M26 x 1,5 internal thread
Process connection		G 1/2
Accessories		
Accessories (optional)		Adapter: 1 x M18 x 1,5, for direct connection of flow sensors, E40104
Remarks		
Remarks		Use a lubricating paste which is suitable and approved for the application
		Observe the notes on the installation of progressive ring fittings
Pack quantity		1 pcs.