

Tempatron Tel: +44(0)1621 859500 Fax: +44(0)1621 855335

PID330 PID Temperature Controllers

Models Available

PID330 PID Temperature Controller

Product Features

- Dual display of set point & process value
- 1 or 2 On/Off or PID control outputs
- Auto-tuning of PID parameters
- Reverse or direct action
- Up to 3 relay or SSR outputs
- Alarm output
- Thermocouple, RTD and analogue inputs
- Single point ramp and soak facility
- 24Vac/dc or 85 to 270Vac powered
- Sensor break detection
- Error compensation
- Standard DIN96 square size
- Panel mounting
- Optional RS-485 communication

The Tempatron PID330 temperature controllers are advanced, 4 digit auto-tuning controllers with up to 3 outputs which are designed for control of temperature or processes in a wide range of industrial applications. The controllers operate from a range of thermocouple or 2/3 wire PT100 (RTD) input sensors, or from a millivolt, 0-5Vdc, 0-10Vdc or 0/4-20mA process signal.

Versions are available with relay, SSR or analogue outputs which can be configured as 1 on/off or PID control and up to 2 alarm outputs, or as 2 on/off or PID controls (heat/cool) and 1 alarm output. The temperature controllers are housed in a compact DIN96 square enclosure which panel mounts, and are auxiliary powered from either 24Vac/dc or 85 to 270Vac.

For temperature control in machinery, systems and operational processes

Dimensions

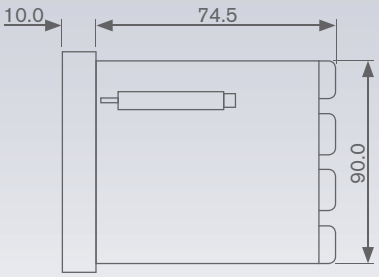

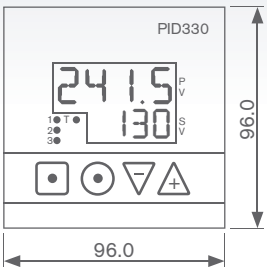

Panel cutout 92mm square (-0.0/+0.5)

All dimensions in mm

Connections

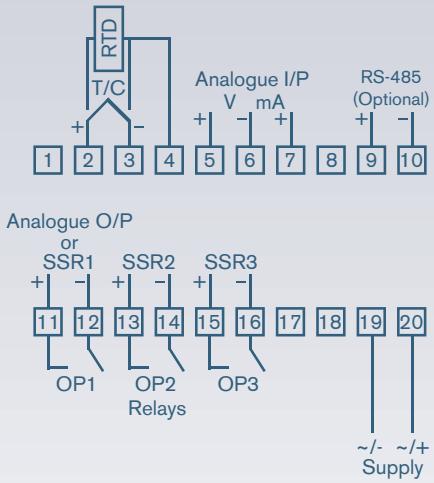

View on rear

Ordering information

Model	Code	Description
	PID330	PID Temperature Controller

Auxiliary Power	Code	Description
	ML	24Vac/dc
	MH	85 to 270Vac

Output 1	Code	Description
	0	Relay
	1	SSR drive (18Vdc/20mA)
	2	4-20mA
	3	0-10Vdc
	4	0-5Vdc
	5	0-20mA

Output 2	Code	Description
	0	Relay
	1	SSR drive (12Vdc/20mA)

Output 3	Code	Description
	00	None
	01	Relay
	02	SSR drive (12Vdc/20mA)
	03	RS-485 Communication

Example	PID330MH-0000

Input	Scale Range
J Type Thermocouple	-200 to 750°C
K Type Thermocouple	-200 to 1350°C
T Type Thermocouple	-200 to 400°C
R Type Thermocouple	0 to 1750°C
S Type Thermocouple	0 to 1750°C
C Type Thermocouple	0 to 2300°C
E Type Thermocouple	-200 to 750°C
B Type Thermocouple	149 to 1820°C
N Type Thermocouple	-200 to 1300°C
L Type Thermocouple	-200 to 900°C
U Type Thermocouple	-200 to 400°C
W Type Thermocouple	0 to 2300°C
Platinel II Thermocouple	0 to 1390°C
PT100 RTD	-100 to 850°C

Specification

Repeat Accuracy:
- ±0.25% or ±1°C whichever is greatest

Power Supply Voltage:
- 24Vac/dc ±10% (<5VA)
- 85 to 270Vac (<5VA)

Frequency:
- 50/60Hz

Temperature Unit:
- °C or °F selectable

Input Sensor:
- J, K, T, R, S, C, E, B, N, L, U, W and Platinel II thermocouples
- 2/3 wire PT100
- -5 to 56mV, 0 to 10Vdc, 0 to 20mA

Relay Outputs:
- N/O contact
- 5A at 240Vac/30Vdc (resistive)
- 100,000 operations at rated output

SSR Outputs:
- Output 1: 20mA/18Vdc
- Outputs 2 & 3: 20mA/12Vdc

Optional Analogue Output:
- 0/4-20mA, 0-10Vdc or 0-5Vdc
- Maximum load resistance 500ohms

Control Action:
- PID (autotune) or on/off

Outputs 1 and 2:
- Forward or reverse action

Outputs 2 and 3:
- Absolute or deviation alarm

Resolution:
- 1/0.1°C for thermocouples and PT100
- 1/0.1/0.01/0.001 for analogue inputs

Operating Temperature:
- 0°C to 50°C

Storage Temperature:
- -20°C to 75°C

Enclosure Code:
- Case IP65

Weight:
- 400g

Markings:
- CE marked (meets EN61010-1 low voltage and EN50081-1/50082-1 EMC directives)

Specification subject to change without notice.

Tempatron: Eltime House, Hall Road, Maldon, Essex, CM9 4NF UK.

TEMPATRON

Tempatron Industrial Controls is a division of Eltime Ltd.

© Eltime Ltd. Tempatron PID330 Temperature Controllers 04/2011