E3LC10 230V AC

Manufacturer data sheet: V1.081

Monitoring relay- Level monitoring of conductive liquids

Status: Available Data sheet created: 01.07.2025

Item Number: 1341505 - **Serie:** Enya - **EAN:** 9008662011434



- Monitoring relays series ENYA
- Level monitoring for conductive liquids
- Multifunction
- Supply voltage 230V AC
- Fixed on-delay and off-delay 5s
- Safe isolation of the measuring circuits
- 1 changeover contact
- Construction width 35mm
- Installation type

Description

Level monitoring of conductive liquid with adjustable sensitivity.

General information

Short description	Level monitoring of conductive liquids, 1 changeover contact
Item Number	1341505
EAN	9008662011434
Main category	Monitoring Relays
Series	Enya
Type	E3LC10 230V AC
Design	Installation design
Supply	230V AC
Dimensions	35 x 87 x 65 mm

Functions and measurands

Amount of functions 4

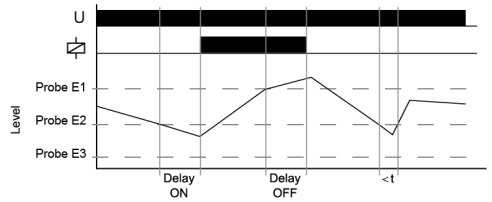

Pump Up (Pump Up)

Connection of the probe rods E1, E2 and E3. Alternatively the electrically conducting container can be connected in lieu of the test probe E3. When the air-fluid level falls below the minimum probe E2 the interval of tripping delay (Delay ON) begins. After the expiration of the interval, the output relays R switches into on-position (yellow LED illuminated). When the air-fluid level again rises above the maximum probe E1, the interval of turn-off delay (Delay OFF) begins. After the expiration of the interval the output relays R switches into off-position (yellow LED not illuminated).

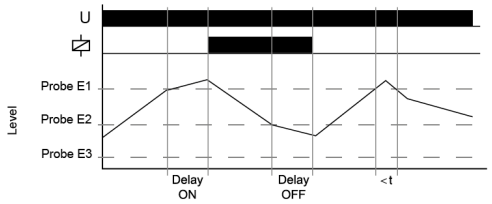

Pump down (Pump down)

Connection of the probe rods E1, E2 and E3. Alternatively the electrically conducting container can be connected in lieu of the test probe E3. When the maximum probe E1 gets moistened the interval of tripping delay (Delay ON) begins. After the expiration of the interval the output relays R switches into on-position (yellow LED illuminated). When the airfluid level falls below the minimum probe E2, the interval of turn-off delay (Delay OFF) begins. After the expiration of the interval, the output relays R switches into off-position (yellow LED not illuminated).

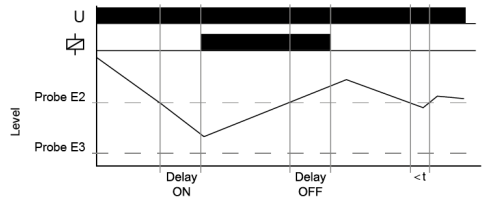

Minimum monitoring (Pump up)

Connection the probe rods E2 and E3 (bridge E1-E3). Alternatively the electrically conducting container can be connected in lieu of the test probe E3. When the air-fluid level falls below the probe E2 the interval of tripping delay (Delay ON) begins. After the expiration of the interval, the output relays R switches into on-position (yellow LED illuminated). When the air-fluid level again rises above the probe E2, the interval of turn-off delay (Delay OFF) begins. After the expiration of the interval the output relays R switches into off-position (yellow LED not illuminated).

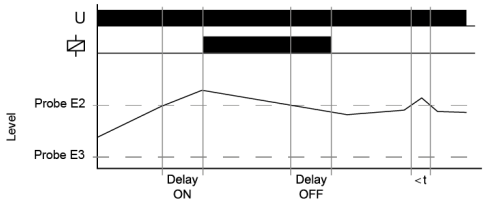

Maximum monitoring (Pump down)

Connection of probe rods E2 and E3 (bridge E1-E3). Alternatively the electrically conducting container can be connected in lieu of the test probe E3. When the probe E2 gets moistened the interval of tripping delay (Delay ON) begins. After the expiration of the interval the output relays R switches into on-position (yellow LED illuminated). When the air-fluid level sinks below the probe E2, the interval of turn-off delay (Delay OFF) begins. After the expiration of the interval the output relays R switches into off-position (yellow LED not illuminated).

Time ranges

Number Of Areas	2	
	Setting range	
Time ranges	Switch-on delay (ON-Delay)	fix 5s
	Relapse delay (OFF-Delay)	fix 5s

Indicators

Supply/time lapse 1	Green LED U ON: Supply voltage applied
Relay state	Yellow LED ON/OFF: output relay position

E3LC10 230V AC

Mechanical design

Housing material	made of self-extinguishing plastic
Housing - protection degree	IP40
Mounting	top hat rail TH 35 7,5-15 according to IEC 60715:2017 / EN 60715:2017
Terminals/connections	Touch-proof clamping yoke terminals according to DGUV 3 (Screwdriver PZ1 required)
Terminals - protection degree	IP20
Mounting position	any
Max. Tightening Torque	1 Nm
Terminal capacity	• 1 x 0.5 to 2.5mm² with/without ferrule • 1 x 4mm² without wire end ferrule • 2 x 0.5 to 1.5mm² with/without end sleeves • 2 x 2.5mm² flexible without ferrules

Supply circuit

Terminals/connections	A1-A2
Supply voltage a.c.	230 V
Supply voltage tolerance a.c.	-15% ... +10% Un
Rated frequency [Hz]	a.c. 48 ... 63 Hz
Rated consumption a.c.	1 W / 2 VA
Duty cycle	100%
Recovery time	500 ms
Drop-out voltage	>30% the supply voltage
Overvoltage category	III (IEC 60664-1)
Rated surge voltage	6 kV

Output curcuit

Type	Relay
Contact 1	1 change over contact
Terminals 1	15-16-18
Contacts 2	1 change over contact
Terminals/connections 2	25-26-28
Rated voltage	250 V a.c.
Fuse Protection	5 A quick
Mechanical life	15 x 10^6 Switching cycles
Electrical life	100 x 10^3 Switching cycles (1000VA)
Rated surge voltage	6 kV
Overvoltage category	III (IEC 60664-1)

E3LC10 230V AC

Manufacturer data sheet: V1.081

Measuring circuit

Measurand	Level
Terminals/connections	E1-E2-E3
Switching threshold minimum	5 kΩ
Switching threshold maximum	100 kΩ
Rated surge voltage	6 kV
Overvoltage category	III (nach IEC 60664-1)
Sensor voltage	12 V a.c.
Sensor current	max. 330 µA
Wiring distance	(capacity of cable 100nF/km) max. 1000m (set value
Sensitivity	5 to 100 kΩ(200 µS to 10 µS)

Measuring circuit - level

Ambient conditions and general specifications

Ambient temperature IEC	-25 to +55°C
Storage temperature	-25 ... +70 °C
Transport temperature	-25 ... +70 °C
Relative humidity	15% to 85% (in accordance with IEC 60721-3-3 class 3K3)
Pollution degree	2, pollution level can be increased by installation in suitable enclosures (according to IEC 60664-1)

Logistics

Minimum Quantity	1
Tariff Number	85364900
EAN	9008662011434
Country of Origin	AT
Product Weight (g)	140

Available declarations / conformities

EAC	✓
CE	Open document
UL	Open document
c(UL)	Open document
REACH	Open document
WEEE	Open document
TSCA	Open document
RoHs	Open document
CMRT	Open document

CAD Files

STEP_E1_en.STEP	Download file

E3LC10 230V AC

Media & drawings



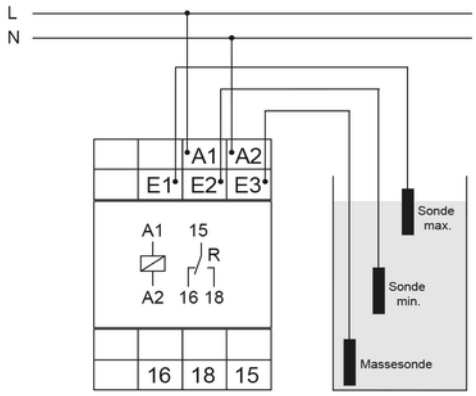

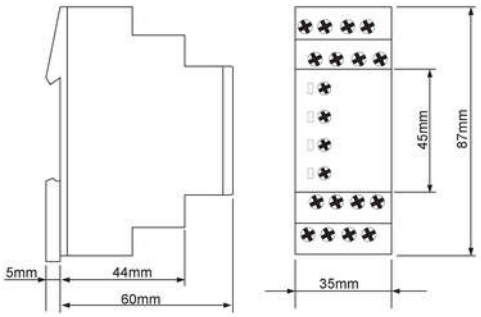

Tele Haase Steuergeräte Ges.m.b.H
Vorarlberger Allee 38
1230 Vienna
Austria

CALL US +43 / 1 / 614 74 - 0
ONLINE SUPPORT support@tele-haase.at

Changes and errors excepted