ASCO™ SOLENOID VALVE

3/2 UNIVERSAL SERVICE – DIRECT ACTING - G 3/8

SERIES
L340

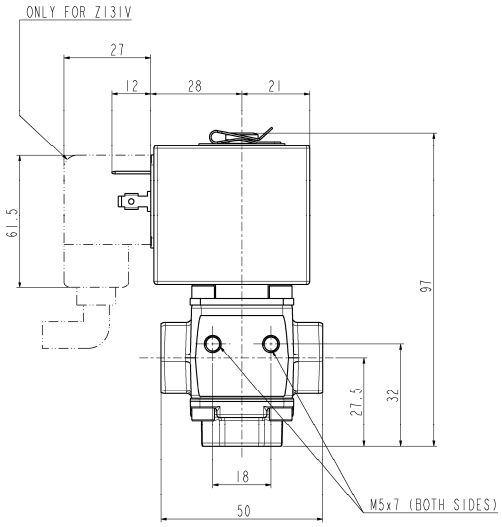

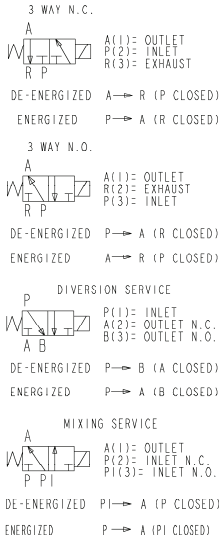



General Features

Direct acting solenoid valve.

Suitable to shut off liquid and gaseous fluids (verify the compatibility of fluid with material in contact).

Technical Features	
Maximum allowable pressure (PS)	16bar
Opening time	~30ms
Closing time	~30ms
Fluid temperature	-20°C +130°C (only for use with vegetal oils–diesel) 0°C +130°C (other fluids)
Max viscosity	5°E (~37 cStokes or mm²/s)

Materials in Contact with Fluid	
Body	Aluminum
Sealing	FPM
Internal components	Stainless steel - PTFE
Seat	Aluminum
Core tube	Stainless steel

Coil		
Continuous duty		ED 100%
Encapsulation material		PET (polyethylene-terephtalate) fibreglass reinforced
Insulation class		**Z130A-Z131V:** F (140°C) **Z134A:** H (165°C) - UL
Ambient temperature		**Z130A-Z131V:** -10°C +60°C **Z134A:** -30°C +80°C
Electric connections		DIN46340 - 3 poles plug connectors (EN175301-803)
Protection degree		IP 65 (EN 60529) with plug connectors
Voltages	DC	12-24V (+10% -5%) – see note 3
		(Other voltages on request)

Port size ISO 228	Orifice size (mm)	Differential pressure (bar)					Kv (m^3/h)	Series and type		Power absorption			Sealings	Notes	Weight (kg)
		Δp min	Δp max					Valve	Coil	AC (VA)		DC (W)			
			Gases		Liquids					Inrush	Holding				
			AC	DC	AC	DC									
G 3/8	12	0	-	4	-	4	1,4	**L340V09G**	**Z130A**	-	-	13	FPM	1 - 2	0,470
									Z134A						
									Z131V					1 – 2 – 3	0,490
				2		2	1,3	**L340V10G**	**Z130A**					2 - 4	0,470
									Z134A						
				1,5		1,5			**Z131V**					2 - 3 - 4	0,490

Notes

- Sealings: FPM = Fluoro-carbon elastomer

1 - When used in mixing function the Δp max is 6 bar

2 - Designed for heavy duties and high number of cycles. The parts subject to sliding friction are duly coated by PTFE self lubricating material.

3 - The use of Z131V coil (fitted by plug connector with built-in rectifier) allows energizing in AC rated at 220-230V/50-60Hz - 240V/60Hz.

4 - Silenced model

1007/1309

ASCO™ SOLENOID VALVE

3/2 UNIVERSAL SERVICE – DIRECT ACTING - G 3/8

Spare Parts

L340V09G

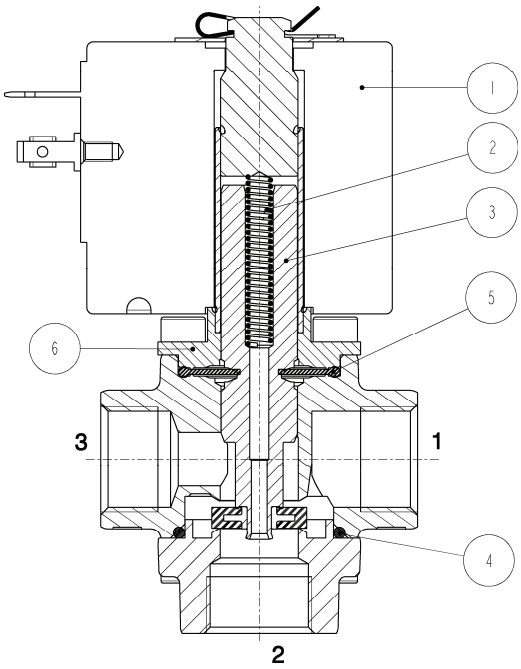

L340V10G

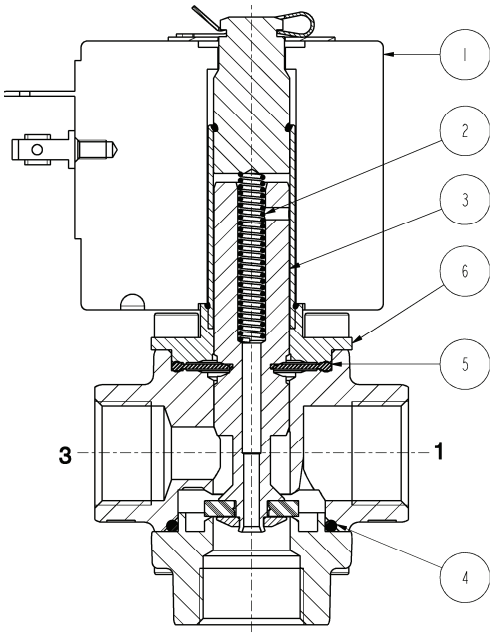

Kit description	Model	Kit P.N.	Consisting of:
Core kit	L340V09G	G3139702	Core pos.3 Diaphragm pos.5 Core return spring pos.2 O-Ring pos.4
	L340V10G	G3142401	
Core return spring kit		G2446101	N.10 core return spring pos.2
O-Ring kit		GU2424000021	N.10 O-Ring pos.4
Guide pipe assembly		292713-001R	Guide pipe pos.6
Coil		Z130A Z134A Z131V	Coil pos.1

Installation

- Solenoid valve can be mounted in any position; vertical with coil upwards preferred.

THE VALIDITY OF REPORTED DATA IS REFERRED TO THE DATE OF ISSUE. POSSIBLE UPDATES ARE AVAILABLE ON REQUEST