WIRING DIAGRAM

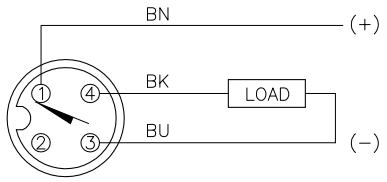

OUTPUT: AP6X

SHORT−CIRCUIT AND OVERLOAD PROTECTED

LOCKNUT LN−SS08

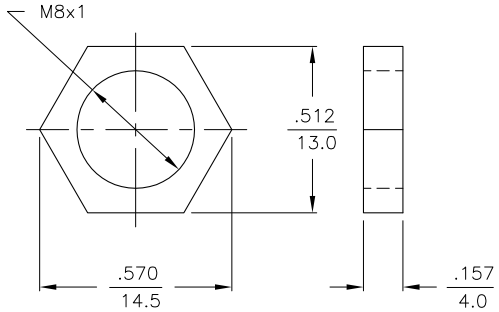

SPECIFICATIONS

OPERATING VOLTAGE	10−30 VDC
RIPPLE	≤10%
DIFFERENTIAL TRAVEL (HYSTERESIS)	1−15% (5% TYPICAL)
VOLTAGE DROP ACROSS CONDUCTING SENSOR	≤1.8 V at 150 mA
OUTPUT FUNCTION	NORMALLY OPEN 3−WIRE DC SELF−CONTAINED
TTL COMPATIBLE	NO
SHORT−CIRCUIT PROTECTED	YES
TRIGGER CURRENT FOR OVERLOAD PROTECTION	≥170 mA
CONTINUOUS LOAD CURRENT	≤150 mA
OFF−STATE (LEAKAGE) CURRENT	< 100 µA
NO−LOAD CURRENT	1.0−9.5 mA
TIME DELAY BEFORE AVAILABILITY	≤8 ms
POWER−ON EFFECT PROTECTION	INCORPORATED
REVERSE POLARITY PROTECTION	INCORPORATED
WIRE−BREAK PROTECTION	INCORPORATED
PROTECTION AGAINST TRANSIENTS	EN 60947−5−2
OPERATING TEMPERATURE	−25°C to +70°C (−13°F to +158°F)
ENCLOSURE	MEETS NEMA 1, 3, 4, 6, 13 AND IEC IP67
SHOCK	30 g, 11 ms
VIBRATION	55 Hz, 1 mm AMPLITUDE (IN ALL 3 PLANES)
LED FUNCTION	YELLOW: OUTPUT ENERGIZED
RATED OPERATING DISTANCE(Sn)	3 mm = .118" (NOMINAL)
SWITCHING FREQUENCY	≤3000 Hz
REPEATABILITY	≤2% of RATED OPERATING DISTANCE
EMBEDDABLE (SHIELDED)	NO

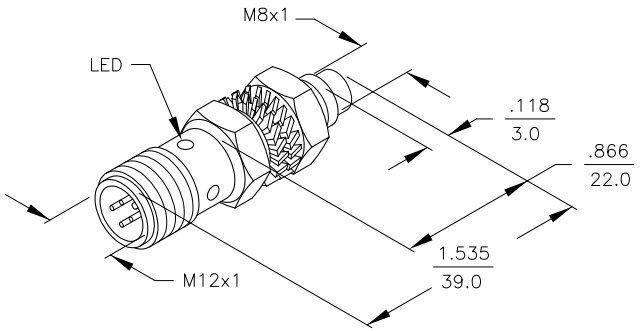

SOURCE DRAWING - FOR REFERENCE ONLY

NOTES: 1. MATERIALS:
BARREL − STAINLESS STEEL, V2A 1.4301
LOCKNUTS − STAINLESS STEEL
LOCKWASHERS − STAINLESS STEEL

REV	DESCRIPTION	BY	DATE	ECO NO.
B	UPDATE SWITHCING FREQUENCY FROM 2000HZ TO 3000HZ	RWC	12/05/07	19626

RELATED DOCUMENTS
1.
2.
3.
4.

3RD ANGLE PROJECTION

THIS DRAWING IS PROPERTY OF TURCK INC. USE OF THIS DOCUMENT WITHOUT WRITTEN PERMISSION IS PROHIBITED.

TURCK INC
High Technology Sensors and Automation Controls
3000 CAMPUS DRIVE
MINNEAPOLIS, MN 55441
1−800−544−7769
(763) 553−7300
(763) 553−0708 fax
turck.com

MATERIAL: SEE NOTES

FINISH: SEE NOTES

ALL DIMENSIONS DISPLAYED ON THIS DRAWING ARE FOR REFERENCE ONLY

CONTACT TURCK FOR MORE INFORMATION

DRFT: CBM | DATE: 11/12/03

DSGN | SCALE: NONE

UNIT OF MEASUREMENT
INCH [MILLIMETER]
DO NOT SCALE THIS DRAWING

DESCRIPTION: NI 3−EG08K−AP6X−H1341

IDENTIFICATION NO.: S4669660 | REV: B

FILE: S4669660 | SHEET 1 OF 1