E43911

Gasket

3A TA PEEK-RING

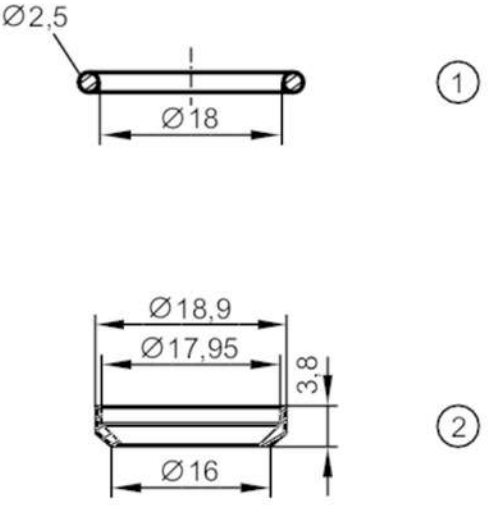

1 sealing ring on the sensor side
2 sealing ring on process side

EC 1935/2004 EHEDG Certified FDA

Application		
Design		for sealing cone G 1/2
Mechanical data		
Weight	[g]	4.5
Materials		sealing ring on the sensor side: FKM; sealing ring on process side: PEEK in contact with the medium
Remarks		
Pack quantity		1 pcs.