E40199

Mounting adapter for flow sensors

REDADAPT G1/2"-R1/2"

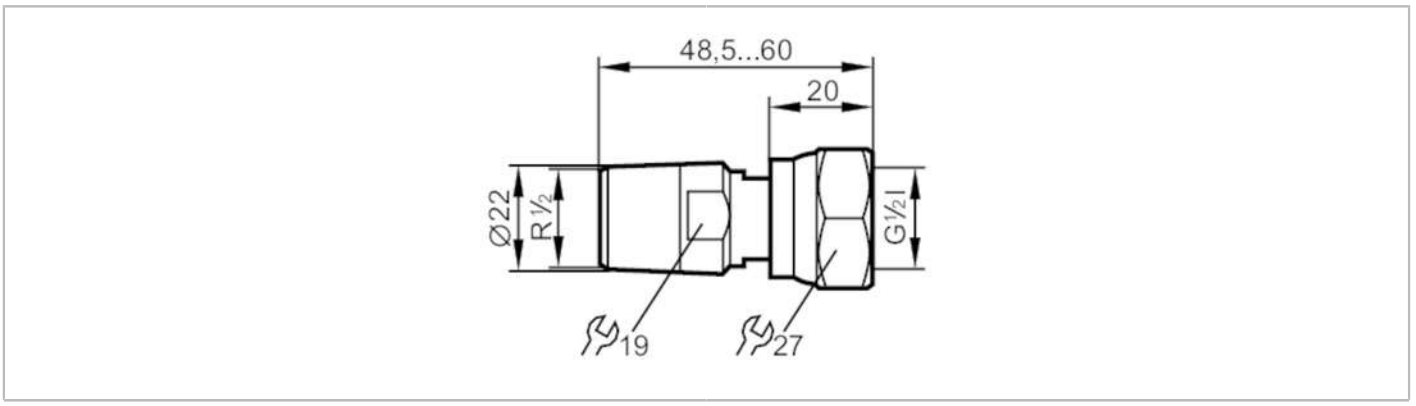

ACS Reg31

Application		
Design		for flow sensors SM6
Tests / approvals		
Pressure Equipment Directive		A possible classification to PED depends on the application and has to be carried out by the user / operator.
Pressure Equipment Directive EAC		The adapter is intended for use in devices, machines and installations that do not fall under the categories of the technical rule TR CU 032/2013.
Safety instructions		The compatibility between medium and product material has to be checked in all applications.
Mechanical data		
Weight	[g]	251
Materials		Adapter: stainless steel (1.4571/316Ti); Gasket: Centellen 18,5 x 12 x 3 mm
Sensor connection		G 1/2
Process connection		threaded connection R 1/2
Sealing		flat seal
Accessories		
Items supplied		O-rings: 2
Remarks		
Pack quantity		2 pcs.