JUMO GmbH & Co. KG
Delivery address: Mackenrodtstraße 14
36039 Fulda, Germany
Postal address: 36035 Fulda, Germany
Phone: +49 661 6003-0
Fax: +49 661 6003-607
E-mail: mail@jumo.net
Internet: www.jumo.net

JUMO Instrument Co. Ltd.
JUMO House
Temple Bank, Riverway
Harlow, Essex CM20 2DY, UK
Phone: +44 1279 635533
Fax: +44 1279 635262
E-mail: sales@jumo.co.uk
Internet: www.jumo.co.uk

JUMO Process Control, Inc.
8 Technology Boulevard
Canastota, NY 13032, USA
Phone: 315-697-5866
1-800-554-JUMO
Fax: 315-697-5867
E-mail: info.us@jumo.net
Internet: www.jumousa.com

JUMO MIDAS SI
OEM-Pressure Transmitter



Type 401006/000-xxx-xxx-xxx-20-61



Type 401006/000-xxx-xxx-xxx-20-36

Brief description

This pressure transmitter can be used for measuring the relative (gauge) and absolute pressures in liquids and gases. The pressure transmitter operates on the piezoresistive measuring principle. The pressure is converted into an electrical signal.

Technical data

Reference conditions
to DIN 16 086 and IEC 770/5.3

Measurement ranges
see Order details

Overload limit
for ranges up to
0 — 25 bar 3 x full scale

Bursting pressure
for ranges up to
0 — 25 bar ≤ 4 x full scale

Parts in contact with medium
standard: stainless steel, Mat. Ref. 1.4571, 1.4435

Output
4 — 20 mA
2-wire burden ≤ (U_B-10 V) / 0.02A
0.5 — 4.5 V burden ≥ 20 kΩ
1 — (5)6 V burden ≥ 10 kΩ
0 — 10 V burden ≥ 10 kΩ

Burden error
< 0.5% max.

Zero signal deviation
≤ 0.3% of full scale

Thermal hysteresis
≤ ± 0.5% of full scale
(within compensated temperature range)
≤ ± 1% for ranges 0 — 250 mbar
0 — 400 mbar
0 — 600 mbar

Ambient temperature error
within range -20 to +85°C
(compensated temperature range)
zero: ≤ 0.02%/°C typical,
≤ 0.04%/°C max.
span: ≤ 0.02%/°C typical,
≤ 0.04%/°C max.

Deviation from characteristic
≤ 0.5% of full scale
(limit point adjustment)

Hysteresis
≤ 0.1% of full scale

Repeatability
≤ 0.05% of full scale

Response time
≤ 3 msec max.

Stability over 1 year
≤ 1% of full scale

Supply
10 — 30 V DC (for output 4 — 20 mA and 1 — (5)6 V)
5 V DC (for output 0.5 — 4.5 V)
11.5 — 30 V DC (for output 0 — 10 V)
Ripple: the voltage spikes must not go outside the limits specified for the supply.
Max. current drawn: approx. 25 mA

Supply voltage error
≤ 0.02% per V
(nominal supply voltage 24 V DC)
ratiometric with supply 5 V DC (±0.5 V)

Permissible ambient temperature
for version with connector:
-20 to +125°C
for version with attached cable:
-20 to +100°C

Storage temperature
-40 to +125°C
for version with attached cable
-20 to +100°C

Permissible temperature of medium
-30 to +125°C

Electromagnetic compatibility (EMC)
to EN 61 326

Mechanical shock
(to IEC 68-2-27)
100 g/1 msec

Mechanical vibration
(to IEC 68-2-6)
20 g max. at 15 — 2000 Hz

JUMO GmbH & Co. KG
Delivery address: Mackenrodtstraße 14
36039 Fulda, Germany
Postal address: 36035 Fulda, Germany
Phone: +49 661 6003-0
Fax: +49 661 6003-607
E-mail: mail@jumo.net
Internet: www.jumo.net

JUMO Instrument Co. Ltd.
JUMO House
Temple Bank, Riverway
Harlow, Essex CM20 2DY, UK
Phone: +44 1279 635533
Fax: +44 1279 635262
E-mail: sales@jumo.co.uk
Internet: www.jumo.co.uk

JUMO Process Control, Inc.
8 Technology Boulevard
Canastota, NY 13032, USA
Phone: 315-697-5866
1-800-554-JUMO
Fax: 315-697-5867
E-mail: info.us@jumo.net
Internet: www.jumousa.com

Protection
with terminal box
IP65 to EN 60 529
(connection cable diameter:
5 mm min., 7 mm max.)
with connection cable or
with circular connector M 12 x 1
IP67 to EN 60 529

Housing
stainless steel, Mat. Ref. 1.4301
PBT

Pressure connection
see Order details;
other connections on request

Electrical connection
see Order details
terminal box to DIN 43 650,
Style A,
conductor cross-section up to 1.5 mm^2;
or
attached 4-core PVC cable, 0.5 m long,
other lengths on request
or 4-pole circular connector
M 12 x 1

Nominal position
unrestricted

Weight
120 gm

Electrical connection

Connection			Terminal assignment		
			Terminal box	Cable	M12x1
Supply 10 — 30 V DC 11.5 — 30 V DC 5 V DC	(for output) (1 — (5)6 V) (0 — 10 V) (0.5 — 4.5 V)		1 L+ 2 L-	white brown	1+ 2-
Output 1 — (5)6 V 0 — 10 V 0.5 — 4.5 V			2 - 3 +	brown yellow	2- 3+
Supply 10 — 30 V DC	(for output) (4 — 20 mA, 2-wire)		1 L+ 2 L-	white brown	1+ 3-
Output 4 — 20 mA, 2-wire			1 + 2 -	white brown	1+ 3-
			proportional 4 to 20 mA current in supply		

Pin assignment



JUMO GmbH & Co. KG
Delivery address: Mackenrodtstraße 14
36039 Fulda, Germany
Postal address: 36035 Fulda, Germany
Phone: +49 661 6003-0
Fax: +49 661 6003-607
E-mail: mail@jumo.net
Internet: www.jumo.net

JUMO Instrument Co. Ltd.
JUMO House
Temple Bank, Riverway
Harlow, Essex CM20 2DY, UK
Phone: +44 1279 635533
Fax: +44 1279 635262
E-mail: sales@jumo.co.uk
Internet: www.jumo.co.uk

JUMO Process Control, Inc.
8 Technology Boulevard
Canastota, NY 13032, USA
Phone: 315-697-5866
1-800-554-JUMO
Fax: 315-697-5867
E-mail: info.us@jumo.net
Internet: www.jumousa.com

Dimensions

401006/000-XXX-XXX-504-20-61

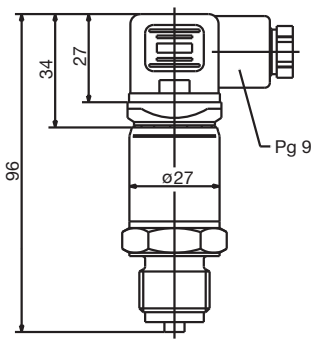

401006/000-XXX-XXX-504-20-11

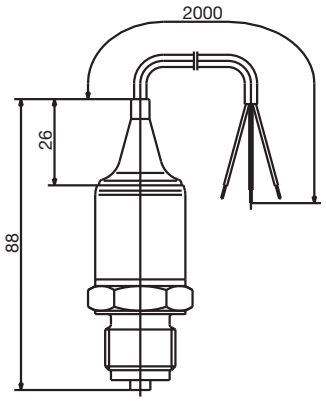

401006/000-XXX-XXX-504-20-36

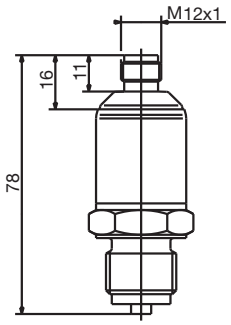

Process connections

502

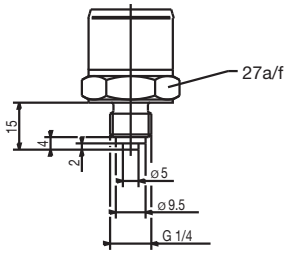

504

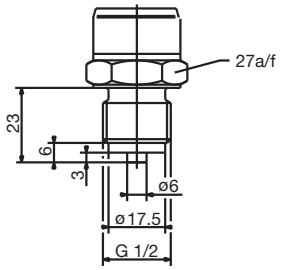

511

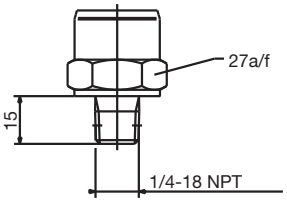

521

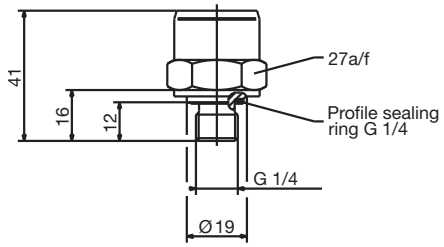

523

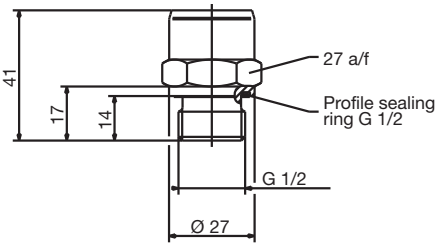

562

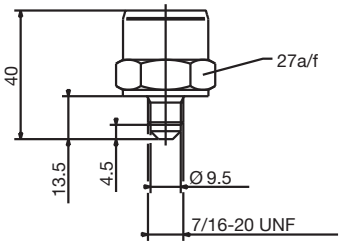

JUMO GmbH & Co. KG
Delivery address: Mackenrodtstraße 14
36039 Fulda, Germany
Postal address: 36035 Fulda, Germany
Phone: +49 661 6003-0
Fax: +49 661 6003-607
E-mail: mail@jumo.net
Internet: www.jumo.net

JUMO Instrument Co. Ltd.
JUMO House
Temple Bank, Riverway
Harlow, Essex CM20 2DY, UK
Phone: +44 1279 635533
Fax: +44 1279 635262
E-mail: sales@jumo.co.uk
Internet: www.jumo.co.uk

JUMO Process Control, Inc.
8 Technology Boulevard
Canastota, NY 13032, USA
Phone: 315-697-5866
1-800-554-JUMO
Fax: 315-697-5867
E-mail: info.us@jumo.net
Internet: www.jumousa.com

Order details

| | | |