JUMO GmbH & Co. KG
Delivery address: Mackenrodtstraße 14
36039 Fulda, Germany
Postal address: 36035 Fulda, Germany
Phone: +49 661 6003-0
Fax: +49 661 6003-607
Email: mail@jumo.net
Internet: www.jumo.net

JUMO Instrument Co. Ltd.
JUMO House
Temple Bank, Riverway
Harlow, Essex, CM20 2DY, UK
Phone: +44 1279 63 55 33
Fax: +44 1279 62 50 29
Email: sales@jumo.co.uk
Internet: www.jumo.co.uk

JUMO Process Control, Inc.
6733 Myers Road
East Syracuse, NY 13057, USA
Phone: +1 315 437 5866
Fax: +1 315 437 5860
Email: info.us@jumo.net
Internet: www.jumousa.com

JUMO MIDAS

OEM-Pressure Transmitter

Applications

- Compressors
- Mechanical and plant engineering
- Industrial Pneumatics
- Commercial vehicles
- Building technology

Brief description

The pressure transmitter is used for pressure measurement of liquid and gaseous media. With the well proofed ceramic thick film sensor, the pressure is measured, converted into an electrical standard signal (voltage or current) and output via electrical connections, e.g. cable socket, M12 plug or attached cable.

A large number of process connections are available for adaptation to the process.



Type 401001 with cable socket



Type 401001 with round plug M12

Customer benefits

- **Process-reliable**
  The ceramic measuring cell made of alumina exhibits good long-term stability, achieved through selected sensor material and a special adjustment procedure, as well as high overload resistance. The high quality of each pressure transmitter is ensured by the 100 % final inspection of a fully automated measuring and calibration system.
- **Economic**
  A largely automated production process (digital compensation and calibration of the sensor assembly) reduces production time and manufacturing costs - an optimal price-performance ratio is achieved.
- **Versatile**
  A wide range of measuring ranges, process connections and electrical connections as well as all standard signals are available. Thus an optimal adaptation to the measuring task is possible.
- **Proven**
  The instrument is the basis of the proven pressure transmitter series JUMO MIDAS. More than 1 million devices in various applications and applications in the field speak for themselves.

Special features

- From 0 to 1,6 bar up to 0 to 100 bar, relative pressure
- Elastomer-sealed
- Compact design: from 58 mm length
- High chemical resistance
- High mechanical strength membrane

JUMO GmbH & Co. KG
Delivery address: Mackenrodtstraße 14
36039 Fulda, Germany
Postal address: 36035 Fulda, Germany
Phone: +49 661 6003-0
Fax: +49 661 6003-607
Email: mail@jumo.net
Internet: www.jumo.net

JUMO Instrument Co. Ltd.
JUMO House
Temple Bank, Riverway
Harlow, Essex, CM20 2DY, UK
Phone: +44 1279 63 55 33
Fax: +44 1279 62 50 29
Email: sales@jumo.co.uk
Internet: www.jumo.co.uk

JUMO Process Control, Inc.
6733 Myers Road
East Syracuse, NY 13057, USA
Phone: +1 315 437 5866
Fax: +1 315 437 5860
Email: info.us@jumo.net
Internet: www.jumousa.com

Technical data

General Information

Reference conditions	To DIN 16086 and DIN EN 60770
Mounting position	Any
Calibration position	Device upright, process connection at the bottom

Measuring range and accuracy

Measuring range bar	Linearity[a] % MSP[f]	Accuracy at 20 °C[d] % MSP	 -20 to +100 °C[e] % MSP	Long term stability[b] % MSP per year	Overload[c] bar	Burst bar
0 to 1.6 bar relative pressure	0.3	0.5	1.6	≤ 0.2	6	12
0 to 2.5 bar relative pressure	0.3	0.5	1.6		6	12
0 to 4 bar relative pressure	0.3	0.5	1.6		12	25
0 to 6 bar relative pressure	0.25	0.5	1.4		12	25
0 to 10 bar relative pressure	0.25	0.5	1.4		20	38
0 to 16 bar relative pressure	0.25	0.5	1.4		50	75
0 to 25 bar relative pressure	0.25	0.5	1.4		50	75
0 to 40 bar relative pressure	0.25	0.5	1.4		120	200
0 to 60 bar relative pressure	0.25	0.5	1.4		120	200
0 to 100 bar relative pressure	0.25	0.5	1.4		180	250
-1 to +0.6 bar relative pressure	0.3	0.6	1.6		6	12
-1 to +1.5 bar relative pressure	0.3	0.6	1.6		6	12
-1 to +3 bar relative pressure	0.3	0.6	1.6		12	25
-1 to +5 bar relative pressure	0.25	0.6	1.4		12	25
-1 to +9 bar relative pressure	0.25	0.6	1.4		20	38
-1 to +15 bar relative pressure	0.25	0.6	1.4		50	75
-1 to +24 bar relative pressure	0.25	0.6	1.4		50	75

[a] Linearity according to limit point-setting, DIN EN 61298-2

[b] Reference conditions DIN EN 61298-1

[c] All pressure transmitter are vaccum proof.

[d] Includes: linearity, hysteresis, repeatability, deviation from measuring range start (offset), and measuring range end

[e] Includes: linearity, hysteresis, repeatability, deviation from measuring range start (offset) and measuring range end, thermal influences on measuring range start (offset), and measuring span

[f] MSP = measuring span

JUMO GmbH & Co. KG
Delivery address: Mackenrodtstraße 14
36039 Fulda, Germany
Postal address: 36035 Fulda, Germany
Phone: +49 661 6003-0
Fax: +49 661 6003-607
Email: mail@jumo.net
Internet: www.jumo.net

JUMO Instrument Co. Ltd.
JUMO House
Temple Bank, Riverway
Harlow, Essex, CM20 2DY, UK
Phone: +44 1279 63 55 33
Fax: +44 1279 62 50 29
Email: sales@jumo.co.uk
Internet: www.jumo.co.uk

JUMO Process Control, Inc.
6733 Myers Road
East Syracuse, NY 13057, USA
Phone: +1 315 437 5866
Fax: +1 315 437 5860
Email: info.us@jumo.net
Internet: www.jumousa.com

Electrical data

Output signal[a]	4 to 20 mA, two-wire (output 405)	DC 0.5 to 4.5 V, three-wire, ratiometric[b] (output 412)	DC 0 to 10 V, three-wire (output 415)
Burden or load[c]	$R_B \leq (U_B - 10\ V) \div 0.02\ A$	$R_L \geq 20\ k\Omega$	$R_L \geq 10\ k\Omega$
Output current	3.6 to 22 mA	-20 to +250 µA	-20 µA to +1 mA
Voltage supply U_B[d]	DC 10 to 30 V	DC 4.75 to 5.25 V	DC 11.5 to 30 V
Nominal voltage	DC 24 V	DC 5 V	DC 24 V
Voltage supply influence	≤ 0.02 %/V	≤ 0.02 %/V	≤ 0.02 %/V
Current consumption[e]	≤ 25 mA	≤ 5 mA	≤ 5 mA
Reverse voltage protection	Yes	No	Yes
Short-circuit resistance[f]	-	No	Yes
Step response T_{90}	≤ 3 ms	≤ 3 ms	≤ 3 ms

Output signal[a]	DC 1 to 5 V, three-wire (output 418)	DC 1 to 6 V, three-wire (output 420)	DC 0 to 10 V, three-wire, increased driver power (output 422)
Burden or load[c]	$R_L \geq 10\ k\Omega$	$R_L \geq 10\ k\Omega$	$R_L \geq 2\ k\Omega$
Output current	-20 µA to +1 mA	-20 µA to +1 mA	-200 µA to +5 mA
Voltage supply U_B[d]	DC 8 to 30 V	DC 8 to 30 V	DC 11.5 to 30 V
Nominal voltage	DC 24 V	DC 24 V	DC 24 V
Voltage supply influence	≤ 0.02 %/V	≤ 0.02 %/V	≤ 0.02 %/V
Current consumption[e]	≤ 5 mA	≤ 5 mA	≤ 5 mA
Reverse voltage protection	Yes	Yes	Yes
Short-circuit resistance[f]	Yes	Yes	Yes
Step response T_{90}	≤ 3 ms	≤ 3 ms	≤ 3 ms

[a] Further outputs are available upon request.

[b] Ratiometric output: output signal from 10 to 90 % of the voltage supply

[c] Load resistance to S-

[d] Residual ripple: The voltage peaks or dips must not exceed or fall below the specified voltage supply values! The device must be equipped with an electrical circuit that meets the requirements of EN 61010-1 with regard to "Limited-energy circuits".

[e] For no-load operation (output unloaded)

[f] Short-circuit resistance S+ against V-

JUMO GmbH & Co. KG
Delivery address: Mackenrodtstraße 14
36039 Fulda, Germany
Postal address: 36035 Fulda, Germany
Phone: +49 661 6003-0
Fax: +49 661 6003-607
Email: mail@jumo.net
Internet: www.jumo.net

JUMO Instrument Co. Ltd.
JUMO House
Temple Bank, Riverway
Harlow, Essex, CM20 2DY, UK
Phone: +44 1279 63 55 33
Fax: +44 1279 62 50 29
Email: sales@jumo.co.uk
Internet: www.jumo.co.uk

JUMO Process Control, Inc.
6733 Myers Road
East Syracuse, NY 13057, USA
Phone: +1 315 437 5866
Fax: +1 315 437 5860
Email: info.us@jumo.net
Internet: www.jumousa.com

Mechanical features

Material	
Process connection	Stainless steel 305
Internal[a] at seal 601	FPM, standard
Internal[a] at seal 602	CR
Internal[a] at seal 604	FFPM
Internal[a] at seal 999	Special material
External[a] at G 1/4 (process connection 521)	FPM
Sensor	Ceramic Al_2O_3 96 %, Measuring principle: Thick film on ceramic body (piezoresistive)
Housing	Stainless steel 305
Attached cable (electrical connection 11)	PBT-GF30, PVC
Round plug M12 × 1 (electrical connection 36)	PBT-GF30, stainless steel 303 L
Cable socket (electrical connection 61)	PBT-GF30, PA, silicone
Sensor	
Admissible load change	> 10 million, 0 to 100 % measuring range
Weight	100 g with G 1/4 (process connection 502)

[a] Note the medium durability of the selected seal material!

Environmental influences

Admissible temperatures for electrical connection	
Medium	-20 to +125 °C
Ambient	-20 to +85 °C
Storage	-40 to +125 °C (for version with attached cable [electrical connection 11] -20 to +100 °C)
Admissible air humidity	
Operation	100 % relative humidity including condensation on the device outer case
Storage	90 % elative humidity without condensation
Admissible mechanical load	
Vibration resistance[a]	20 g for 10 to 2000 Hz
Shock resistance[b]	100 g for 1 ms
Electromagnetic compatibility[c]	
Interference emission	Class B[d]
Interference immunity	Industrial requirements
Protection type for electrical connection[e]	
Attached cable	IP67
Round plug M12 × 1[f]	IP67
Leitungsdose[f, g]	IP65

[a] IEC 60068-2-6

[b] IEC 60068-2-27

[c] DIN EN 61326-1 and DIN EN 61326-2-3

[d] The product is suitable for industrial use as well as for households and small businesses.

[e] DIN EN 60529

[f] The protection type is only achieved with a suitable mounted counter piece.

[g] Connecting cable diameter, minimum 5mm, maximum 8 mm

JUMO GmbH & Co. KG
Delivery address: Mackenrodtstraße 14
36039 Fulda, Germany
Postal address: 36035 Fulda, Germany
Phone: +49 661 6003-0
Fax: +49 661 6003-607
Email: mail@jumo.net
Internet: www.jumo.net

JUMO Instrument Co. Ltd.
JUMO House
Temple Bank, Riverway
Harlow, Essex, CM20 2DY, UK
Phone: +44 1279 63 55 33
Fax: +44 1279 62 50 29
Email: sales@jumo.co.uk
Internet: www.jumo.co.uk

JUMO Process Control, Inc.
6733 Myers Road
East Syracuse, NY 13057, USA
Phone: +1 315 437 5866
Fax: +1 315 437 5860
Email: info.us@jumo.net
Internet: www.jumousa.com

Dimensions

Electrical connection

11
Attached cable

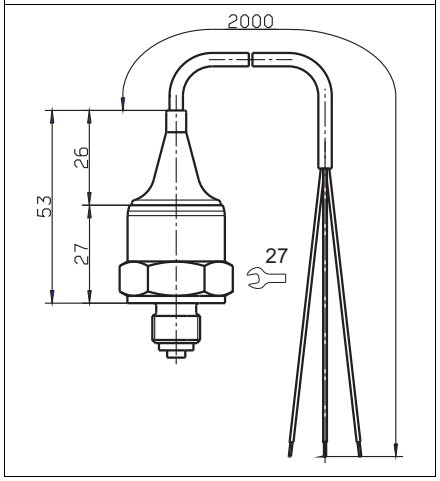

36
Round plug M12 × 1

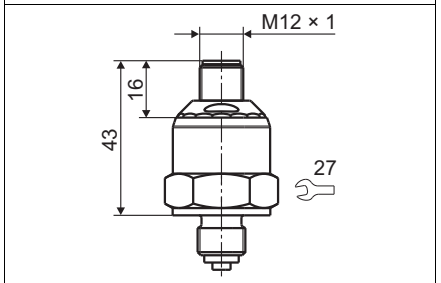

61
Cable socket

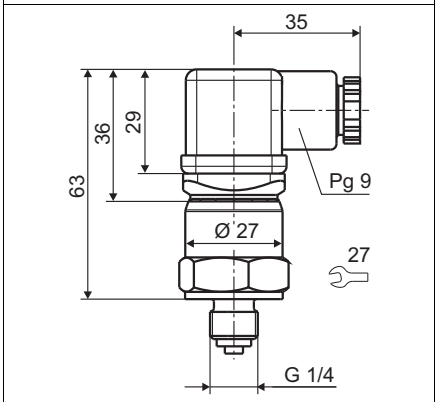

Process connection

501
G 1/8

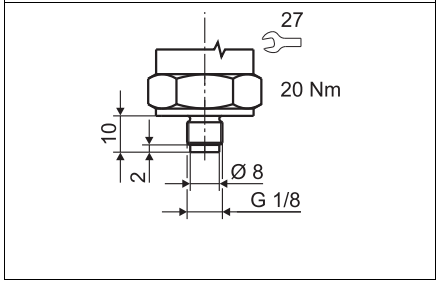

502
G 1/4

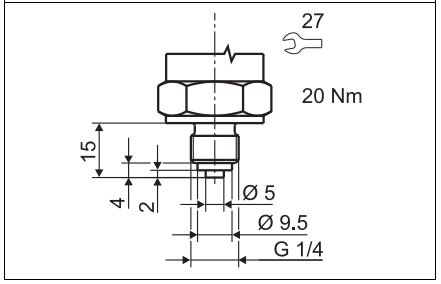

511
1/4-18 NPT

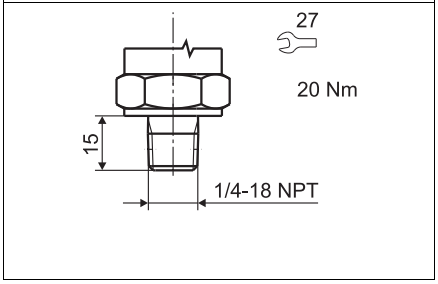

521
G 1/4

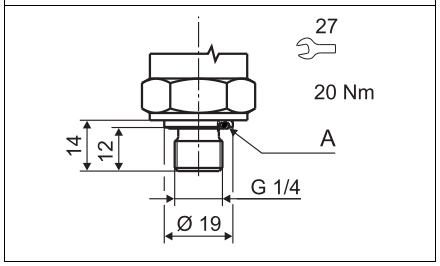

523
G 1/2

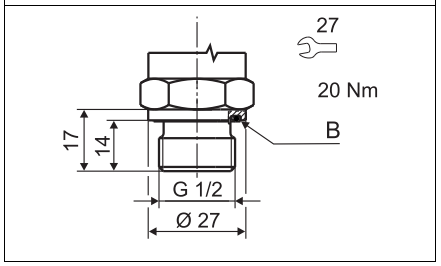

562
7/16-20 UNF external

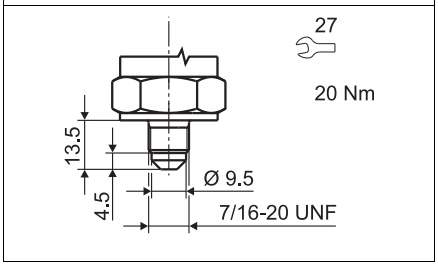

A Profile seal G 1/4

B Profile seal G 1/2

JUMO GmbH & Co. KG
Delivery address: Mackenrodtstraße 14
36039 Fulda, Germany
Postal address: 36035 Fulda, Germany
Phone: +49 661 6003-0
Fax: +49 661 6003-607
Email: mail@jumo.net
Internet: www.jumo.net

JUMO Instrument Co. Ltd.
JUMO House
Temple Bank, Riverway
Harlow, Essex, CM20 2DY, UK
Phone: +44 1279 63 55 33
Fax: +44 1279 62 50 29
Email: sales@jumo.co.uk
Internet: www.jumo.co.uk

JUMO Process Control, Inc.
6733 Myers Road
East Syracuse, NY 13057, USA
Phone: +1 315 437 5866
Fax: +1 315 437 5860
Email: info.us@jumo.net
Internet: www.jumousa.com

Connection diagram

The connection diagram in the data sheet provides preliminary information about the connection options. For the electrical connection, only use the installation instructions or the operating manual. The knowledge and the correct technical compliance with the safety information and warnings contained in these documents are mandatory for mounting, electrical connection, and startup as well as for safety during operation.

Connction			**Terminal assignment**[a]		
				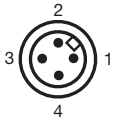	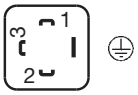
			11 Attached cable	36 Round plug M12 × 1	61 Cable socket
4 to 20 mA, two-wire (output 405)					
Voltage supply	DC 10 to 30 V	U_B/S+ 0 V/S-	WH BN	1 3	1 2
DC 0.5 to 4.5 V, three-wire, ratiometric (output 412)					
Voltage supply	DC 4.75 to 5.25 V[b]	U_B 0 V/S- S+	WH BN YE	1 2 3	1 2 3
DC 0 to 10 V, three-wire (output 415)					
Voltage supply	DC 11.5 to 30 V	U_B 0 V/S- S+	WH BN YE	1 2 3	1 2 3
DC 1 to 5(6) V, three-wire (output 418 [420])					
Voltage supply	DC 8 to 30 V	U_B 0 V/S- S+	WH BN YE	1 2 3	1 2 3
Functional bonding conductor	FB[c]		-	4	

[a] Figure: Connection to the pressure transmitter

[b] The device must be equipped with an electrical circuit that meets the requirements of EN 61010-1 with regard to "Limited-energy circuits".

[c] The pressure transmitter has to be connected to the potential equalization system of the plant via the electrical connection or process connection.

Color coding: connecting cable round plug M12 × 1	1 BN	Brown
	2 WH	White
	3 BU	Blue
	4 BK	Black
The color coding is **only** valid for A-coded standard cables!		

JUMO GmbH & Co. KG
Delivery address: Mackenrodtstraße 14
36039 Fulda, Germany
Postal address: 36035 Fulda, Germany
Phone: +49 661 6003-0
Fax: +49 661 6003-607
Email: mail@jumo.net
Internet: www.jumo.net

JUMO Instrument Co. Ltd.
JUMO House
Temple Bank, Riverway
Harlow, Essex, CM20 2DY, UK
Phone: +44 1279 63 55 33
Fax: +44 1279 62 50 29
Email: sales@jumo.co.uk
Internet: www.jumo.co.uk

JUMO Process Control, Inc.
6733 Myers Road
East Syracuse, NY 13057, USA
Phone: +1 315 437 5866
Fax: +1 315 437 5860
Email: info.us@jumo.net
Internet: www.jumousa.com

Order details

	(1)	**Basic type**
401001/000		JUMO MIDAS SI – OEM-Pressure transmitter
401001/999		JUMO MIDAS SI – OEM-Pressure transmitter, special version
	(2)	**Input**
455		0 to 1,6 bar relative pressure
456		0 to 2.5 bar relative pressure
457		0 to 4 bar relative pressure
458		0 to 6 bar relative pressure
459		0 to 10 bar relative pressure
460		0 to 16 bar relative pressure
461		0 to 25 bar relative pressure
462		0 to 40 bar relative pressure
463		0 to 60 bar relative pressure
464		0 to 100 bar relative pressure
479		-1 to +0.6 bar relative pressure
480		-1 to +1,5 bar relative pressure
481		-1 to +3 bar relative pressure
482		-1 to +5 bar relative pressure
483		-1 to +9 bar relative pressure
484		-1 to +15 bar relative pressure
485		-1 to +24 bar relative pressure
999		Special measuring range relative pressure
	(3)	**Output**
405		4 to 20 mA, two-wire
412		0.5 to 4.5 V, three-wire
415		0 to 10 V, three-wire
418		1 to 5 V, three-wire
420		1 to 6 V, three-wire
422		0 to 10 V, three-wire, for increased driving power
	(4)	**Process connection**
501		G 1/8 according to DIN EN 837
502		G 1/4 according to DIN EN 837
511		1/4-18 NPT according to DIN EN 837
521		G 1/4 according to DIN 3852-11
523		G 1/2 according to DIN 3852-11
562		7/16-20 UNF external
	(5)	**Process connection material**
20		CrNi (stainless steel)
	(6)	**Seal**
601		FPM
602		CR
604		FFPM
999		Special material
	(7)	**Electrical connection**
11		Attached cable[a]
36		Round plug M12 × 1
61		Cable socket DIN EN 175301-803, form A

JUMO GmbH & Co. KG
Delivery address: Mackenrodtstraße 14
36039 Fulda, Germany
Postal address: 36035 Fulda, Germany
Phone: +49 661 6003-0
Fax: +49 661 6003-607
Email: mail@jumo.net
Internet: www.jumo.net

JUMO Instrument Co. Ltd.
JUMO House
Temple Bank, Riverway
Harlow, Essex, CM20 2DY, UK
Phone: +44 1279 63 55 33
Fax: +44 1279 62 50 29
Email: sales@jumo.co.uk
Internet: www.jumo.co.uk

JUMO Process Control, Inc.
6733 Myers Road
East Syracuse, NY 13057, USA
Phone: +1 315 437 5866
Fax: +1 315 437 5860
Email: info.us@jumo.net
Internet: www.jumousa.com

	(8)	Extra code
	000	None
	591	Choke in the pressure channel
	624	Oil and grease free

[a] The standard cable length is 2 m. Further lengths are available upon request.

	(1)		(2)		(3)		(4)		(5)		(6)		(7)		(8)	
Order code		-		-		-		-		-		-		/		, ...[a]
Order example	401001/000	-	460	-	412	-	502	-	20	-	601	-	36	/	591	

[a] List extra codes in sequence, separated by commas.

Accessories

Item	Part no.
Cable socket, straight, 4-pin, M12 × 1. 2 m	00404585
Cable socket, angled, 4-pin, M12 × 1. 2 m	00409334
M12 connector, 4-pin, with connecting cable, 5 m	00512341