E30111

Gasket

U-SEAL 50 ST

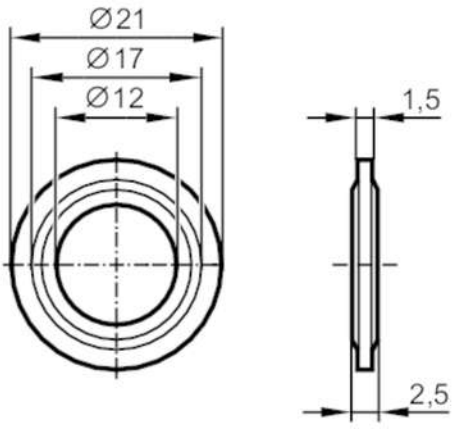

Application		
Medium temperature	[°C]	-30...100
Pressure rating	[bar]	400
Operating conditions		
Ambient temperature	[°C]	-30...100
Mechanical data		
Weight	[g]	96.5
Inside diameter	[mm]	12
External diameter	[mm]	21
Materials		NBR; steel
Remarks		
Pack quantity		50 pcs.