E30463

Screw-in adapter for process sensors

ADAPT PX G1/4 I - Dichtkegel L8

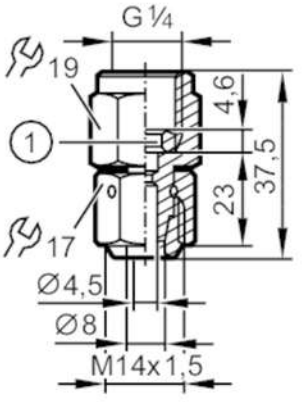

1 double-edge sealing ring

Application		
Application		oil hydraulics applications; Enables orientation of the sensor
Installation		for pipe mounting; (Conduit adapter M14 x 1,5 required)
Pressure rating	[bar]	315
Tests / approvals		
Pressure Equipment Directive		A possible classification to PED depends on the application and has to be carried out by the user / operator.
Pressure Equipment Directive EAC		The adapter is intended for use in devices, machines and installations that do not fall under the categories of the technical rule TR CU 032/2013.
Safety instructions		The compatibility between medium and product material has to be checked in all applications.
Mechanical data		
Weight	[g]	60
Materials		steel (1.0718 / 12L13); stainless steel (1.4305 / 303); steel (1.0216); FKM; Zn-Ni coating
Sensor connection		G 1/4 external thread
Process connection		threaded connection M14 x 1,5 internal thread taper seal:L8
Sealing		double-edge sealing ring
Remarks		
Pack quantity		1 pcs.