Photoelectric sensor

QS186E

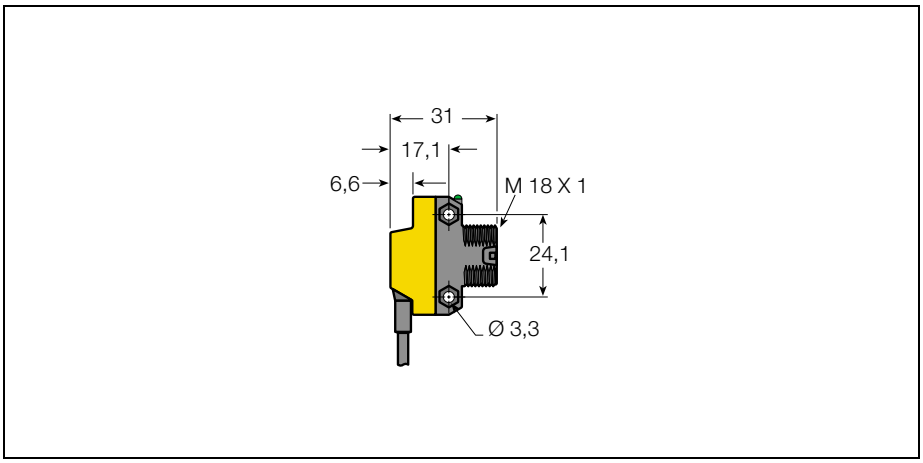

Type	QS186E
Ident-No.	3061618
Max. Erfassungsbereich	20,0 m
Operating mode	Opposed mode (Emitter)
Type of light	IR
Wave length	940 nm
Rated operational voltage (DC) U_e	10...30 VDC
Rated operational current (DC) I_e	100 mA
Reverse polarity protection	yes
Max. switch-on delay	≤100 ms
Degree of protection	IP 67
Operation temperature	-20...70 °C
Housing style	rectangular; QS18
Housing material	Plastic; Polycarbonat/ABS
Wiring	Cable; PVC
Cable length	2,0 m
Cross section	2 x 0,8 mm^2
Supply voltage indication	LED; green
Error indication	LED; green flashing

- **Opposed mode (emitter)**
- **Cable, 2 m**

Wiring diagram

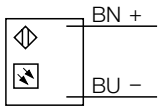

Function principles

Opposed mode sensors have seperate emitter and receiver housings. The sensors are positioned opposite each other and a light beam established between them. An object is detected by interrupting this beam. Opposed mode sensing will always result in the most reliable photoelectric sensing system as long as the object to be detected is opaque to light. Opposed mode sensing is the most efficient sensing mode and offers the highest levels of optical energy to overcome lens contamination and sensor misalignment or to achieve long sensing ranges.

Excess gain curve

Excess gain in relation to the distance

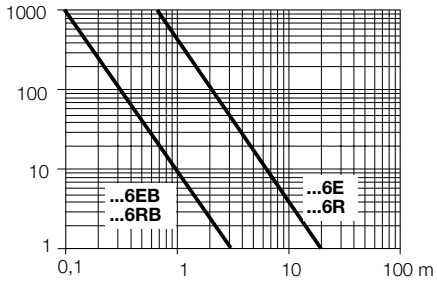

Hans Turck GmbH & Co. KG Postfach • D–45466 Mülheim an der Ruhr • Telefon 02 08/49 52-0 • Telefax 02 08/49 52-264