Brand of NTN corporation

Technical data

USFLE202

Bearing units



Grey cast housing, radial insert ball bearing with socket set screws, single lip seal

KIT CONTENT

US.202.G2, FLE203

VISUAL (S)

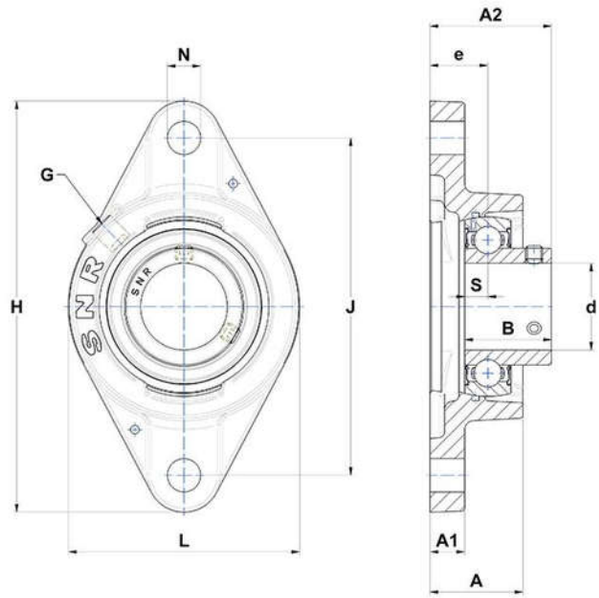

PRODUCT DEFINITION

Brand	SNR
A - Housing height	26 mm
A1 - Housing foot height / flange height	9,5 mm
A2 - Total height from mounting surface	33 mm
B - Width of Inner Ring	22 mm
d - Shaft diameter	15 mm

PRODUCT DEFINITION	
e - Distance mounting surface to bearing center	17 mm
G - Grease fitting	M6
H - Housing length, width or diameter	99 mm
J - Mounting holes distance	76,5 mm
L - Housing width / diameter	57 mm
N - Mounting hole dimension	11,5 mm
S - Distance front side/bearing centre	6 mm

PRODUCT PERFORMANCE	
C - Dynamic load rating	9550000 mN
C0 - Static load rating	4780000 mN
Operating temperature min.	253,15 °K
Operating temperature max.	373,15 °K

OTHER FEATURES	
Mass	0,34 kg
Recommended tightening torque for set screw	3.5 N-m