

STB 55

Safety temperature limiter

Certified to DIN EN 14597

(replaces DIN 3440)

SIL 2

Can be used as:

- Safety temperature limiters (STB)

- Waste gas temperature limiters (ASTB)

- Safety temperature monitors (STW).

rail line

- Certified to EN 61508 SIL2 and EN 14597
- Input from Pt 100 in 3-wire connection, or dual thermocouples type J, K, N and S
- Programmable temperature limit and switching hysteresis
- Basic error <0,5 %, ±2 digits
- Response time 0,5s
- 1 SPDT relay for alarm output
- Memory function for error signalling
- Operator lock (password protection)
- Clips onto top-hat DIN rail
- Convenient 4-key operation

DESCRIPTION

The safety temperature limiter STB 55 is used wherever thermal processes need to be monitored, and the plant switched into a safe condition in case of a fault.

If the permissible temperature limit is reached or if a fault occurs in the monitoring equipment within the permissible temperature range (sensor break or short circuit, failure of a component within the device, fault in the software, failure or impermissible value of the supply voltage, etc.), the STB 55 switches off immediately.

The alarm contact is activated, the "ALARM" LED in the front panel and the background lighting of the display light up, and the cause of the alarm appears in the display in plain text.

In addition, a 24 VDC signal for external alarm signalling is available at terminals 17-18.

SUMMARY

Programming

The unit is programmed by means of the front panel keys and the graphic display.

Operating modes

The unit can be used as:

STB

for max/min monitoring with latching output relay.
After the fault has been rectified, the unit is reset by pressing the front panel key or by closing an external contact.

ASTB

as above, but for monitoring waste gas (flue gas) temperatures.

STW

for max/min monitoring but without latching function.
Automatic reset when monitored value is back within limits.

Switching hysteresis

always acts in the direction of the safe value range.

Fault memory

The most recent fault is displayed in plain language, and can be called and deleted in the Operating Level.

Temperature sensors

The unit may only be operated with temperature sensors tested to EN 14597

Moreover, it must be ensured that the unit's response time does not exceed the values specified in EN 14597 for specific media (see table below).

This means that 63,2 % of a temperature change at the tip of the temperature sensor must be detected and evaluated within a defined period (time constant T).

VALUES SPECIFIED IN EN 14597

Water:	45 s
Oil:	60 s
Air:	120 s
Flue gas:	45 s

TECHNICAL DATA

DIMENSIONS

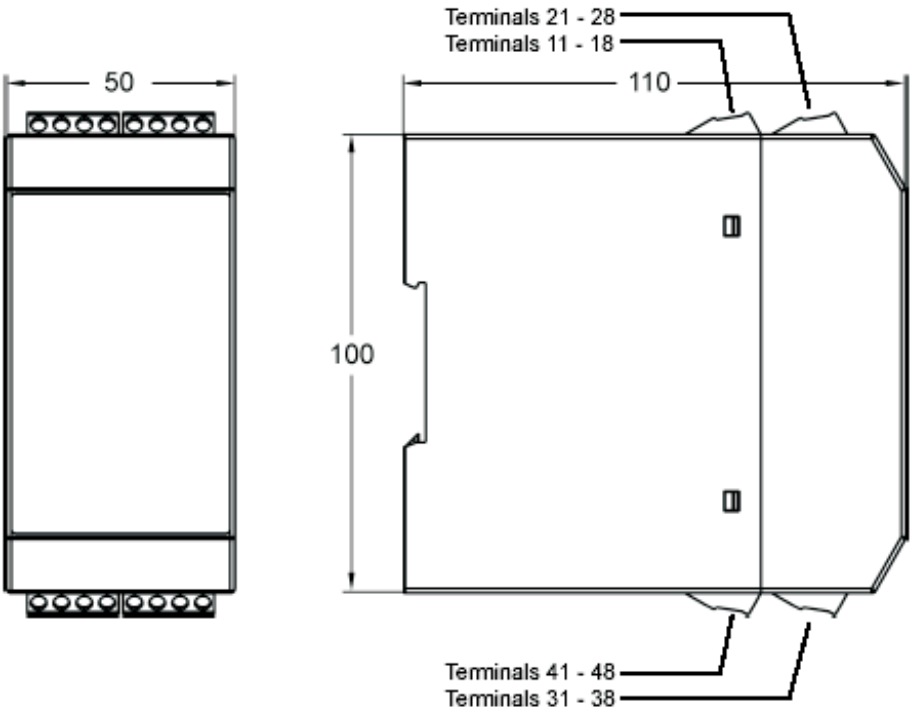

ELECTRICAL CONNECTIONS

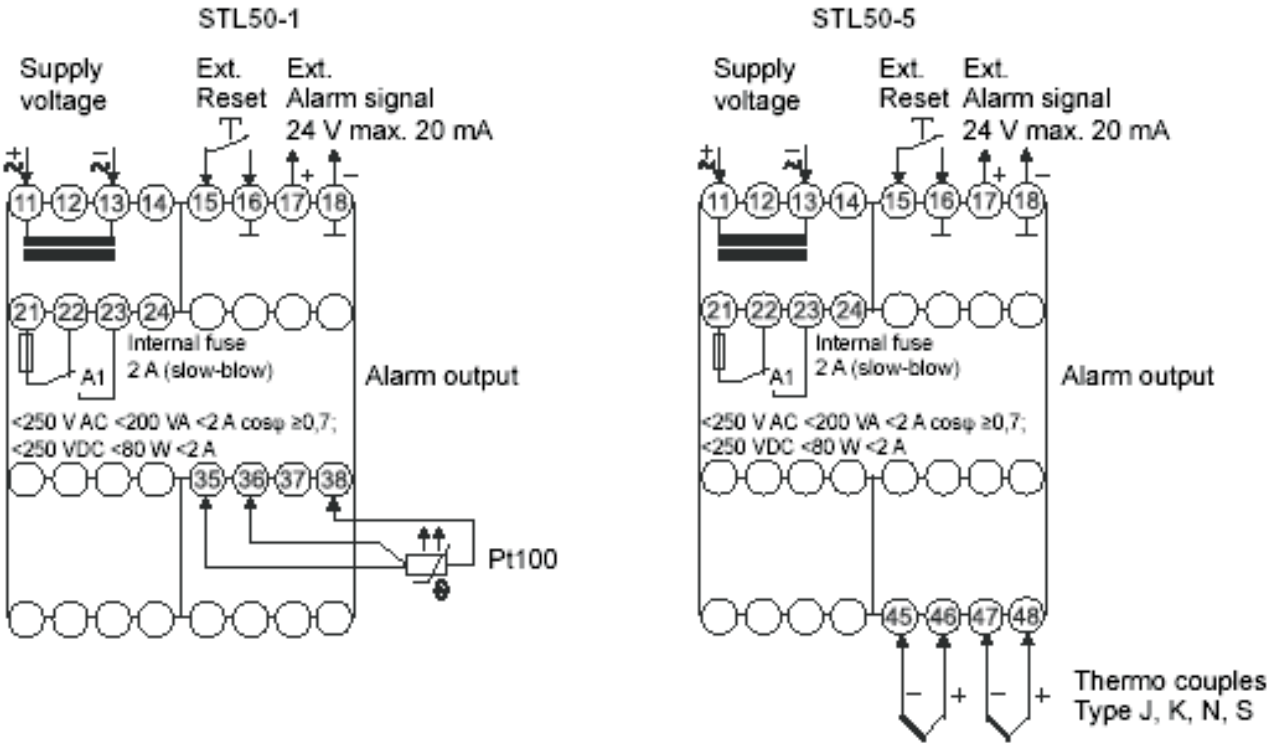

POWER SUPPLY

Depending on ordered version:

AC SUPPLY

Voltage:	230 VAC ±10 % or 115 VAC ±10 %
Power consumption:	<4 VA

DIRECT VOLTAGE

Voltage:	24 VDC ±15 %
Power consumption:	<4 VA

ENVIRONMENTAL CONDITIONS

For operation:	-10...55 °C
Reference voltage:	250 VAC acc. to VDE 0110 between input / relay output / supply voltagePollution degree 2, Overvoltage category III
Test voltage:	4 kV between input / relay output / supply voltage
CE conformity:	EN 55022, EN 60555, IEC 61000-4-2/3/4/5/6/11/13

CERTIFICATIONS

Type tested to EN 14597 (replaces DIN 3440):2005:	With certified sensors applicable for: • Heat generating plants with outflow temperatures up to 120°C to DIN 4751 • Hot-water plants with outflow temperatures above 110°C to DIN 4752 • Thermal transfer plants with organic transfer media to DIN 4754 • Oil-heated plants to DIN 4755
EN 61508:2001 SIL2	"Functional safety of electrical / electronic / programmable electronic safety-related systems"

INPUT

Pt 100:	in the ranges -100,0...600,0 °C or -100...600 °C, 3-wire connection, max. lead resistance 5 Ω, Sensor current: <1 mA (no self-heating)
Thermocouples:	built-in cold junction compensation (CJC)
Type J (FeCu-Ni):	in the ranges -100,0...800,0 °C or -100...800 °C
Type K (NiCr-Ni):	in the range -150...1200 °C
Type N (NiCrSi-NiSi):	in the range -150...1200 °C
Type S (Pt10Rh-Pt):	in the range 0...1600 °C
Basic error:	<0,5 %, ±1 digit
Temperature coefficient:	0,01 %/K

DISPLAY

Graphical LC display:	128 x 64 pixels, with white background lighting

OUTPUT

Relay:	Changeover contact <250 VAC; <200 VA; <2 A, cosφ 0,7; <250 VDC; <80 W; <2A Internally protected by a 2 A slow-acting fuse.

GENERAL

Housing:	Polyamide (PA) 6.6, UL94V-0 mounting to DIN rail TS 35
Weight:	approx. 450 g
Connection:	Screw terminals for 0,14...2,5 mm² (AWG 26...14)
Protection class:	IP 20, BGV A3
Electromagnetic compatibility	Complies with EN 61326-1 and EN 61326-2
Safety tests	Complies with EN 60664-1 (VDE 0110-1), Contamination class 2 Over voltage category III

VERSIONS

	STB55	-	x	0	x	0	-	0	00	
Safety-Temperature Limiter STB 55			↑		↑				↑	
Input										
Pt 100, 3-wire circuit			**1**							
Thermocouples			**5**							
Power supply										
230 VAC ± 10 % 50-60 Hz					**0**					
115 VAC ± 10 % 50-60 Hz					**1**					
24 VDC ± 15 %					**5**					
Customer specific device/front									**xx**	

PMA
Prozess- und Maschinen- Automation GmbH
P.O Box 31 02 29
D - 34058 Kassel
Tel.: +49 - 561 - 505 1307
Fax: +49 - 561 - 505 1710
E-mail: mailbox@pma-online.de
Internet: http://www.pma-online.de

Your local representative:

Printed in Germany - Edition 06/2009 - Subject to alteration without notice - 9498 737 59413