Dimensions
Enclosures

Plastic Enclosures

1 seat

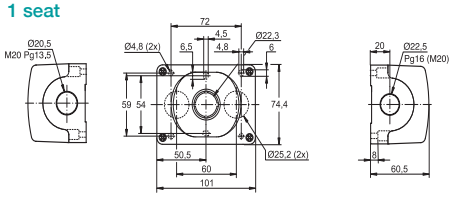

2 seats

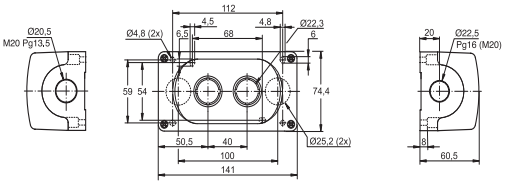

3 seats

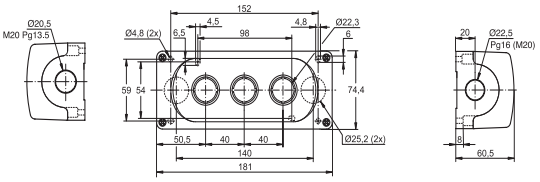

4 seats

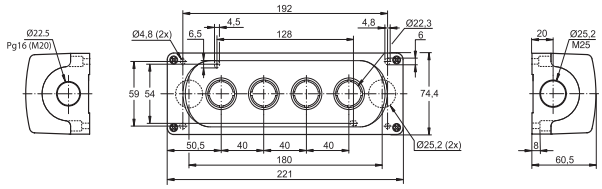

6 seats

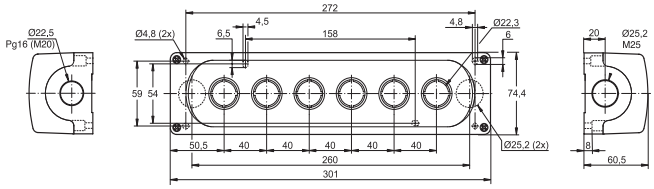

Metallic Enclosures

1 seat

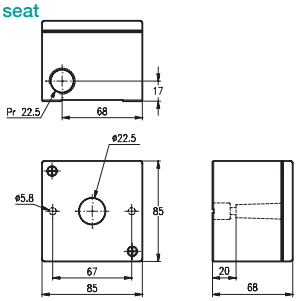

2 or 3 seats

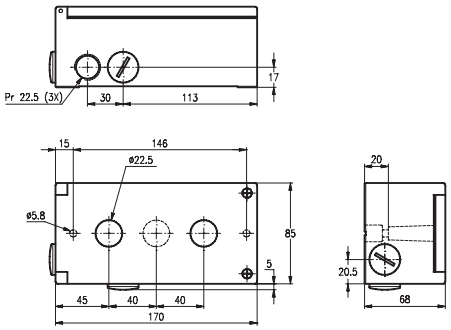

4 or 6 seats

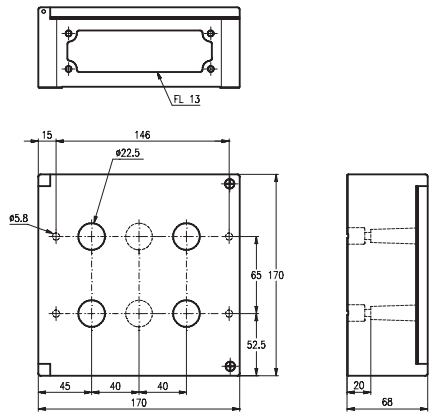

Plastic Enclosure for Compact Range

