Data sheet

Thermistor motor protection relay
CM-MSS.31

The thermistor motor protection relay CM-MSS.31 monitors the winding temperature of motors and protects them from overheating, overload and insufficient cooling.

The device is available with two different terminal versions. You can choose between the proven screw connection technology (double-chamber cage connection terminals) and the completely tool-free Easy Connect Technology (push-in terminals).



Characteristics

- 1 measuring ciruit
- Test / Reset button
- Auto, manual or remote reset configurable
- Short-circuit monitoring of the sensor circuit
- Dynamic interrupted wire detection
- Non-volatile fault storage
- LEDs to distinguish between different failure causes
- Overvoltage protected supply and measuring inputs
- According to the product standard IEC 60947-8
- Screw connection technology or Easy Connect Technology available
- Housing material for highest fire protection classification UL 94 V-0
- Tool-free mounting on DIN rail as well as demounting
- 22.5 mm (0.89 in) width
- Various certifications and approvals (see overview, document no. 2CDC112248D0201)

Order data

Type	Rated control supply voltage	Output contacts	Connection technology	Order code
CM-MSS.31P	24-240 V AC/DC	1 n/o and 1 n/c contact	Push-in terminals	1SVR740712R1400
CM-MSS.31S			Screw terminals	1SVR730712R1400

Connection technology

Maintenance free Easy Connect Technology with push-in terminals

Type designation CM-xxS.yyP

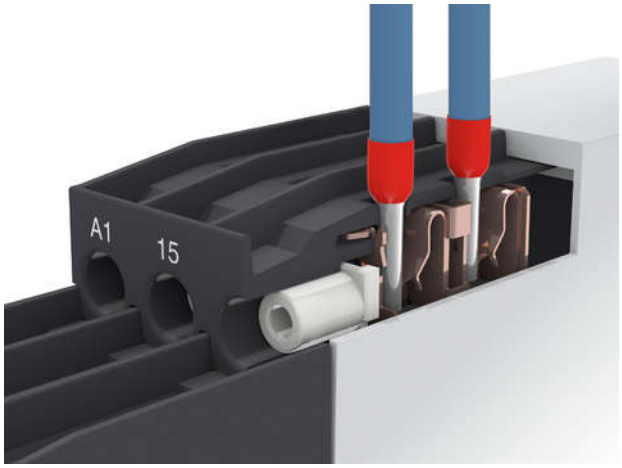

2CDC 253 026 F0011

Push-in terminals

- Tool-free connection of rigid and flexible wires with wire end ferrule
- Easy connection of flexible wires without wire end ferrule by opening the terminals
- No retightening necessary
- One operation lever for opening both connection terminals
- For triggering the lever and disconnecting of wires you can use the same tool (Screwdriver according to DIN ISO 2380-1 Form A 0.8 x 4 mm (0.0315 x 0.157 in), DIN ISO 8764-1 PZ1 ø 4.5 mm (0.177 in))
- Constant spring force on terminal point independent of the applied wire type, wire size or ambient conditions (e. g. vibrations or temperature changes)
- Opening for testing the electrical contacting
- Gas-tight

Approved screw connection technology with double-chamber cage connection terminals

Type designation CM-xxS.yyS

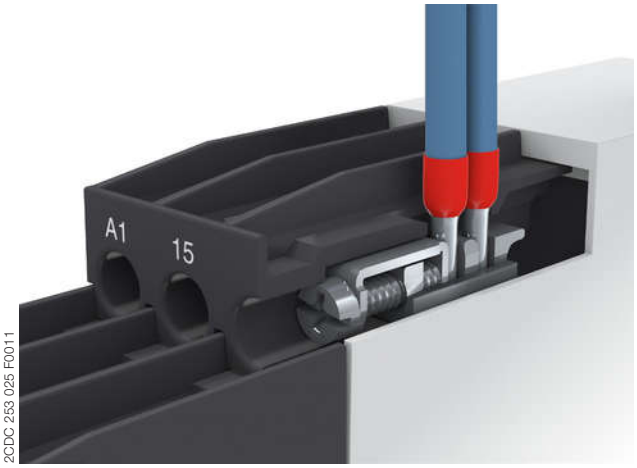

2CDC 253 025 F0011

Double-chamber cage connection terminals

- Terminal spaces for different wire sizes
- One screw for opening and closing of both cages
- Pozidrive screws for pan- or crosshead screwdrivers according to DIN ISO 2380-1 Form A 0.8 x 4 mm (0.0315 x 0.157 in), DIN ISO 8764-1 PZ1 ø 4.5 mm (0.177 in)

Both the Easy Connect Technology with push-in terminals and screw connection technology with double-chamber cage connection terminals have the same connection geometry as well as terminal position.

Functions

Operating controls

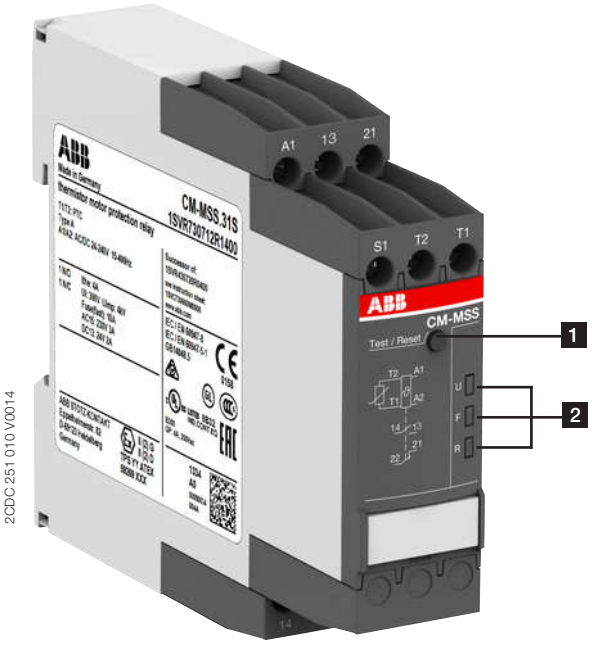

1 Test / Reset button

Reset - only possible if measured value < switch-on resistance

2 Indication of operational states with LEDs

U: green LED - Status indication of control supply voltage

Control supply voltage applied

F: red LED - Fault message

R: yellow LED - Status indication of the output relay

Application / Monitoring function

The thermistor motor protection relay CM-MSS monitors the winding temperature and thus protects the motor from overheating, overload and insufficient cooling in accordance to the product standard IEC 60947-8, control units for built-in thermal protection (PTC) for rotating electrical machines.

ATEX

Suitably selected and adjusted devices of this type are necessary for the safe operation of explosion-protected motors. Only the sensor line is conducted into the explosive atmosphere. The motor protection relay itself must be installed outside the potentially explosive atmospheres.

Marking: Ex II (2) G
II (2) D

Operating mode

The thermistor motor protection relay CM-MSS.31 is used to monitor the temperature of motors or generators equipped with PTC resistor sensors type A. The sensors are built-in into the motor windings, measuring the motor heating. In case of an increase of the temperature in the motor, the resistance of the PTC sensors will increase as well. If the motor heats-up excessively (>2.83 kΩ) the output relays de-energize and the corresponding LED displays the overtemperature. A short circuit and an interrupted wire within the sensor circuit can also be detected. A reset is only possible after cooling down of the motor (<1.1 kΩ) or after a wire interruption or a short circuit within the sensor circuit has been removed. A reset after tripping can be done manually with the Test / Reset button, externally with a push button between S1 and T2, or automatically by jumpering S1 and T2.

By pressing the front-face combined Test / Reset button a system test routine is executed.

Short-circuit detection

If a short circuit is detected between the two lines of a sensor circuit, the output relays de-energize and the LEDs will display the specific error code.

Dynamic interrupted wire detection

During the operation the device is permanently monitoring the measuring circuit. If the resistance in the measuring circuit rises, the device distinguishes if there is an overtemperature or an interrupted wire. Then the output relays de-energize.

Test function

The test function is only possible when there is no fault.

By pressing the front-face combined Test / Reset button a system test routine is executed.

After starting the test routine the output relays de-energize. They remain de-energized until the Test / Reset button is pressed again or control input S1-T2 is closed (remote reset).

Fault storage, reset function

The fault storage is designed as non-volatile (remanent). This means that after switch-off and return of the control supply voltage the device returns to the state it was prior to the switch-off. If prior to the interruption of control supply voltage there was no fault, the device restarts automatically after re-applying control supply voltage.

If there was a fault prior to the interruption, reset can be made manually by the Test / Reset button or externally by remote reset between S1-T2.

Electrical connection

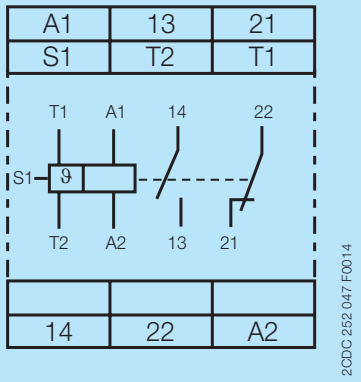

A1 – A2	Control supply voltage
13 – 14	n/o contact
21 – 22	n/c contact
S1 – T2 (jumpered)	Automatic reset
T1 – T2	Measuring circuit

Connection diagram CM-MSS.31

Indication of operational states

LEDs, status information and fault messages (in order of priority)

Operational State	U: LED green	F: LED red	R: LED yellow
Absence of control supply voltage	OFF	OFF	OFF
Internal fault [1]	OFF	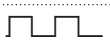	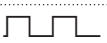
Internal fault [1]			
Control supply voltage not within the tolerance range		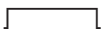	OFF
Short circuit	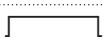		OFF
Interrupted wire	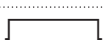		OFF
Overtemperature	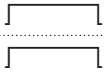	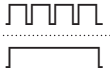	OFF
Fault rectified but not confirmed	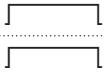	[2]	
Test function		OFF	OFF
Change of configuration not confirmed		OFF	
No fault	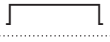	OFF	

[1] Restart the device. If after restart the same fault is indicated, replace the device

[2] Depending on the fault with the highest priority

Function diagrams

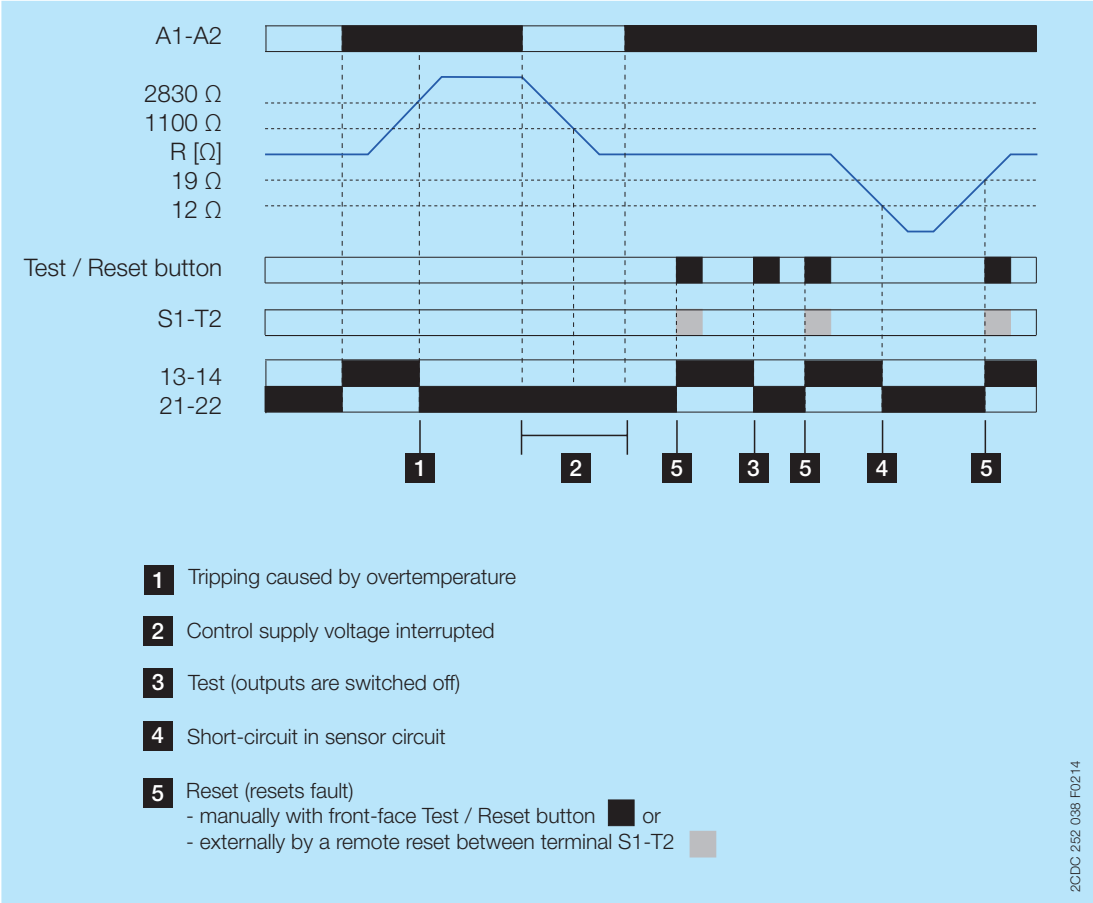

Manual or remote reset (= non-volatile fault storage)

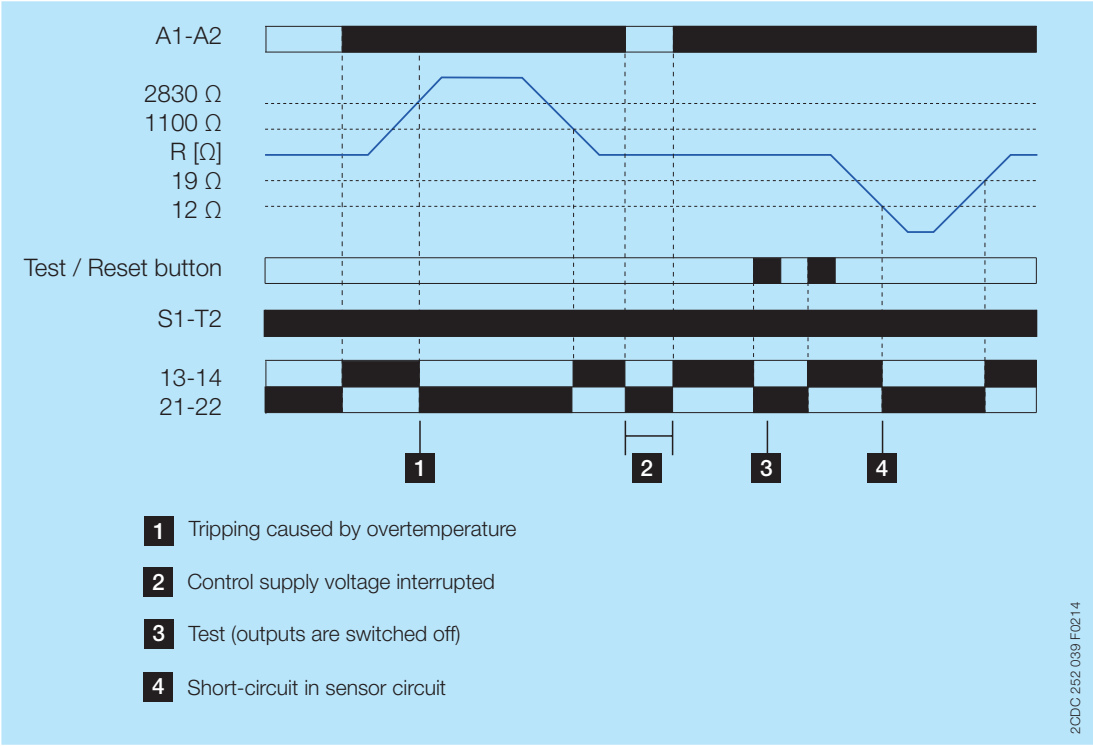

Auto reset (= no fault storage)

Example of application

Circuit diagram

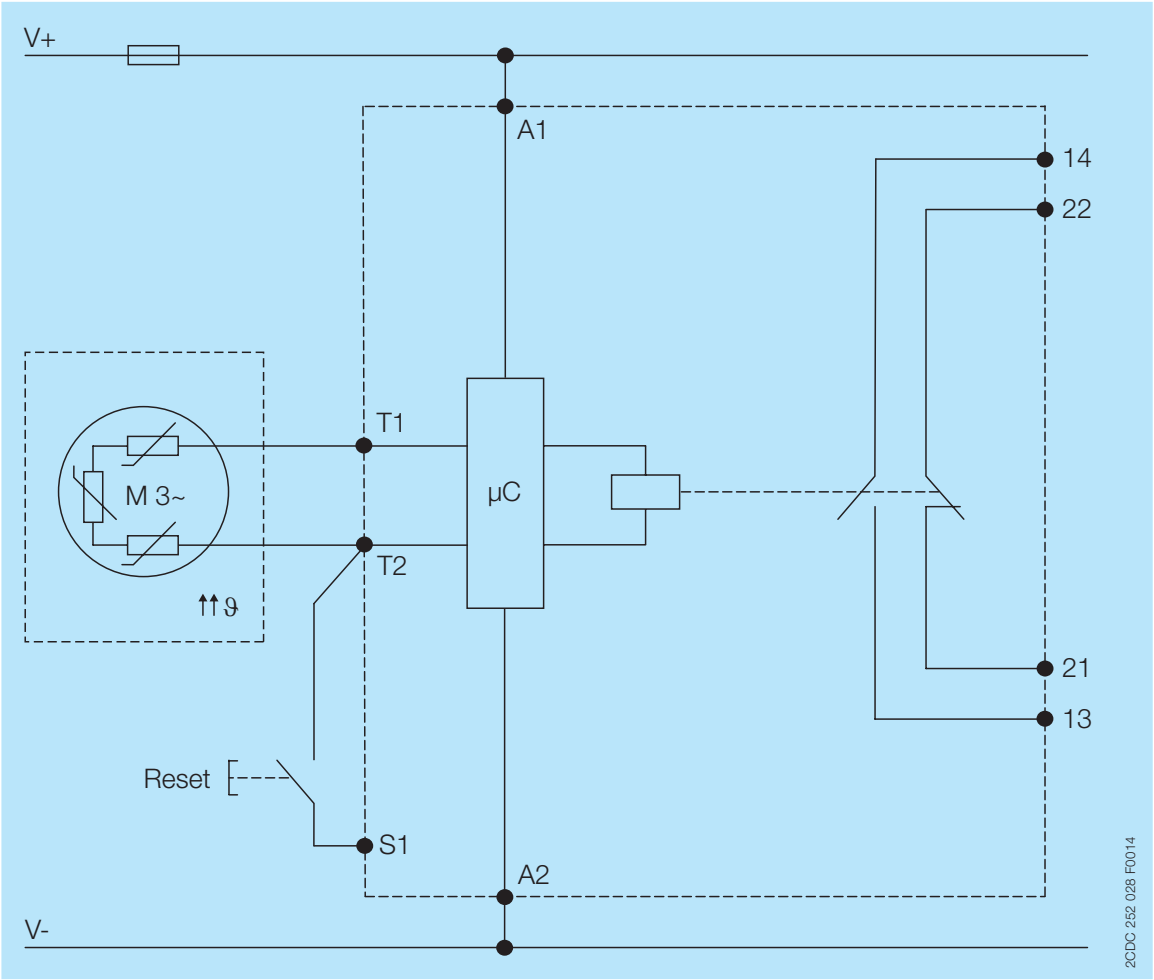

Technical data

Data at T_a = 25 °C and rated values, unless otherwise indicated

Input circuit

Supply circuit		
Rated control supply voltage U_s	A1-A2	24-240 V AC/DC
Rated control supply voltage U_s tolerance		-15...+10 %
Rated frequency		15-400 Hz
Typical current / power consumption	24 V AC/DC	33 mA / 0.55 VA
	220-240 V AC	9 mA / 1.5 VA
Electrical insulation between supply circuit and measuring circuit		yes
Power failure buffering time		20 ms

Measuring circuit / Sensor circuit		**T1-T2**
Number of sensor circuits		1
Sensor type		PTC type A (DIN/EN 44081, DIN/EN 44082)
Max. total resistance of sensors connected in series, cold state		< 750 Ω
Overtemperature monitoring	switch-off resistance (relays de-energize)	2.83 kΩ ± 1%
	switch-on resistance (relays energize)	1.1 kΩ ± 1%
Short-circuit detection		yes
	switch-off resistance (relays de-energize)	<12 Ω
	switch-on resistance (relays energize)	>19 Ω
Interrupted wire detection		yes
	switch-off resistance (relays de-energize)	dynamic
	switch-on resistance (relays energize)	not available
Non-volatile fault storage		yes
Test function		yes
Maximum voltage in sensor circuit	1.33 kOhm	2.5 V
	4 kOhm	3.7 V
	∞ kOhm	5.5 V
Maximum current in sensor circuit		3.7 mA
Maximum sensor cable length		2 x 100 m at 0.75 mm², 2 x 400 m at 2.5 mm²
Accuracy within the rated control supply voltage tolerance		0.50 %
Accuracy within the temperature range		0.01 %/K
Repeat accuracy (constant parameters)		on request
Reaction time of the safety function		<100 ms
Hardware fault tolerance (HFT)		0

Control circuit		**S1 - T2**
Control function	manual reset	yes
	auto reset	adjustable
	remote reset	adjustable
Maximum no-load voltage (S1-1T2/2T2 open)		5.5 V
Max. current (S1-1T2/2T2 jumpered)		0.6 mA
Maximum cable length		2 x 100 m at 0.75 mm², 2 x 400 m at 2.5 mm²

User interface

Indication of operational states		
Control supply voltage	U	LED green
Relay status	R	LED yellow
Fault message	F	see "LEDs, status information and fault messages" on page 4

Operating controls	
Test / Reset	front-face button

Output circuit

Kind of output	13-14	relay, 1 n/o contact
	21-22	relay, 1 n/c contact
Operating principle		closed-circuit principle
Contact material		AgNi alloy, Cd free
Minimum switching voltage / Minimum switching current		24 V / 10 mA
Maximum switching voltage / Maximum switching current		see "Load limit curves" on page 11
Rated operational voltage U_e and rated operational current I_e	AC-12 (resistive) at 230 V	4 A
	AC-15 (inductive) at 230 V	3 A
	DC-12 (resistive) at 24 V	4 A
	DC-13 (inductive) at 24 V	2 A
AC Rating (UL 508)	utilization category (Control Circuit Rating Code)	B 300
	maximum rated operational voltage	300 V AC
	maximum continuous thermal current at B 300	5 A
	maximum making/breaking apparent power at B 300	3600/360 VA
	general purpose rating	250 V AC - 4 A
Mechanical lifetime		30 x 10^6 switching cycles
Electrical lifetime	at AC-12, 230 V AC, 4 A	0.1 x 10^6 switching cycles
Maximum fuse rating to achieve short-circuit protection	n/c contact	10 A fast-acting
	n/o contact	10 A fast-acting

General data

MTBF		on request	
Duty cycle		100 %	
Dimensions		see "Dimensional drawing"	
Weight		**Screw connection technology**	**Easy Connect Technology (push-in)**
	net weight	0.128 kg	0.120 kg
	gross weight	0.154 kg	0.146 kg
Mounting		DIN rail (IEC/EN 60715), snap-on mounting without any tool	
Mounting position		any	
Minimum distance to other units		10 mm (0.39 in) if switching current > 2 A	
		10 mm (0.39 in) if switching current > 2 A	
Material of housing		UL 94 V-0	
Degree of protection	housing	IP50	
	terminals	IP20	

Electrical connection

		Screw connection technology	**Easy Connect Technology (push-in)**
Connecting capacity	fine-strand with(out) wire end ferrule	1 x 0.5-2.5 mm² (1 x 18-14 AWG) 2 x 0.5-1.5 mm² (2 x 18-16 AWG)	2 x 0.5-1.5 mm² (2 x 18-16 AWG)
	rigid	1 x 0.5-4 mm² (1 x 20-12 AWG) 2 x 0.5-2.5 mm² (2 x 20-14 AWG)	2 x 0.5-1.5 mm² (2 x 20-16 AWG)
Stripping length		8 mm (0.32 in)	
Tightening torque		0.6-0.8 Nm (7.08 lb.in)	-
Recommended screw driver		DIN ISO 2380-1: Form A / 0.8x4.0 mm DIN ISO 8764-1: PZ 1 / Ø 4.5 mm	-

Environmental data

Ambient temperature ranges	operation	-25 °C...+60 °C
	storage	-40 °C...+85 °C
Damp heat, cyclic (IEC/EN 60068-2-30)		6 x 24 h cycle, 55 °C, 95 % RH
Climatic class (IEC/EN 60721-3-3)		3K5 (no condensation, no ice formation)
Vibration, sinusoidal		5-13.2 Hz: ±1 mm; 13.2-100 Hz: 0.7 g
Shock		10 g / 11 ms

Isolation data

Rated insulation voltage U_i	Supply circuit / Measuring circuit[1)]	300 V AC
	Supply circuit / Output circuits	300 V AC
	Measuring circuit[1)] / Output circuits	300 V AC
	Output circuit 1 / Output circuit 2	300 V AC
Rated impulse withstand voltage U_{imp}	Supply circuit / Measuring circuit[1)]	4 kV
	Supply circuit / Output circuits	4 kV
	Measuring circuit[1)] / Output circuits	4 kV
	Output circuit 1 / Output circuit 2	4 kV
Basic insulatio)	Supply circuit / Measuring circuit[1)]	600 V AC
	Supply circuit / Output circuits	600 V AC
	Measuring circuit[1)] / Output circuits	600 V AC
	Output circuit 1 / Output circuit 2	300 V AC
Protective separation (IEC/EN 61140, EN 50178)	Supply circuit / Measuring circuit[1)]	yes, up to 300 V
	Supply circuit / Output circuits	yes
	Measuring circuit[1)] / Output circuits	yes
	Output circuit 1 / Output circuit 2	no
Pollution degree		3
Overvoltage category		III

[1)] Potential of measuring circuit = Potential of control circuit

Standards / Directives

Standards	IEC/EN 60947-5-1, IEC/EN 60947-8
Low Voltage Directive	2014/35/EU
EMC Directive	2014/30/EU
ATEX Directive	2014/34/EU
RoHS Directive	2011/65/EU

Electromagnetic compatibility

Interference immunity to		IEC/EN 61000-6-2, IEC/EN 60947-8
electrostatic discharge	IEC/EN 61000-4-2	Level 3, 6 kV contact discharge, 8 kV air discharge
radiated, radio-frequency, electromagnetic field	IEC/EN 61000-4-3	Level 3, 10 V/m (1 GHz), 3 V/m (2 GHz), 1 V/m (2.7 GHz)
electrical fast transient / burst	IEC/EN 61000-4-4	Level 3, 2 kV / 5 kHz
surge	IEC/EN 61000-4-5	Level 3, Installation class 3, supply circuit and measuring circuit 1 kV L-L, 2 kV L-N
conducted disturbances, induced by radio-frequency fields	IEC/EN 61000-4-6	Level 3, 0.15-80 MHz, 10 V, 80 % AM (1kHz)
voltage dips, short interruptions and voltage variations	IEC/EN 61000-4-11	Class 3
harmonics and interharmonics	IEC/EN 61000-4-13	Class 3
Additional interference immunity according to product standard EN 60255-1 (reference on EN 60255-26)		
radiated, radio-frequency, electromagnetic field	IEC/EN 61000-4-3	10 V/m (80 MHz - 3 GHz)
conducted disturbances, induced by radio-frequency fields	IEC/EN 61000-4-6	10 V at stated frequencies
damped oscillatory waves	IEC/EN 61000-4-18	Signal lines, symmetric coupling: 1 kV peak voltage Power supply, asymmetric coupling: 2.5 kV peak voltage,
Interference emissions		IEC/EN 61000-6-3
high-frequency radiated	IEC/CISPR 22, EN 55022	Class B
high-frequency conducted	IEC/CISPR 22, EN 55022	Class B
high-frequency radiated	Germanischer Lloyd	increased requirements in the emergency call frequency band

Technical diagrams

Load limit curves

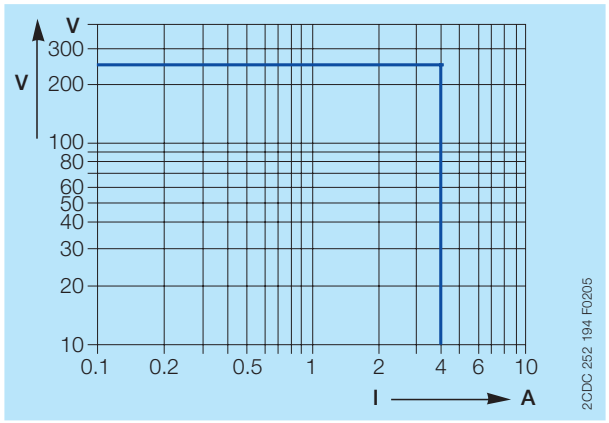

AC load (resistive)

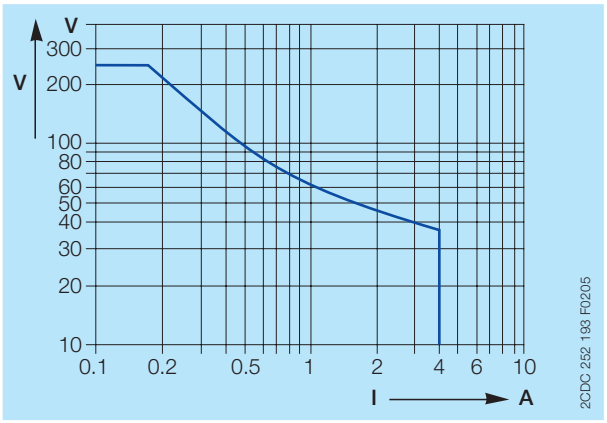

DC load (resistive)

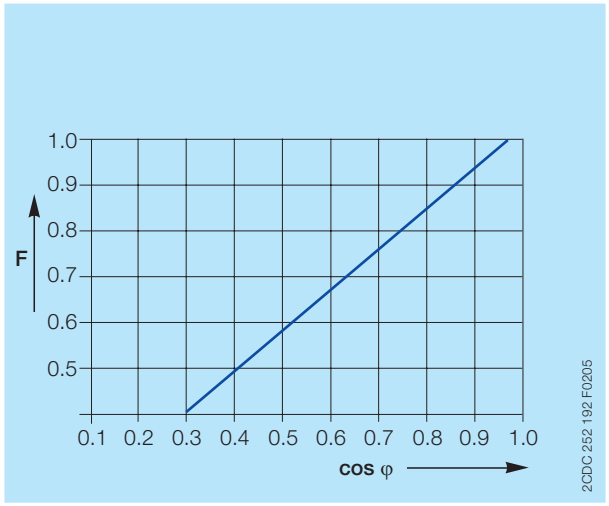

Reduction factor F for inductive AC load

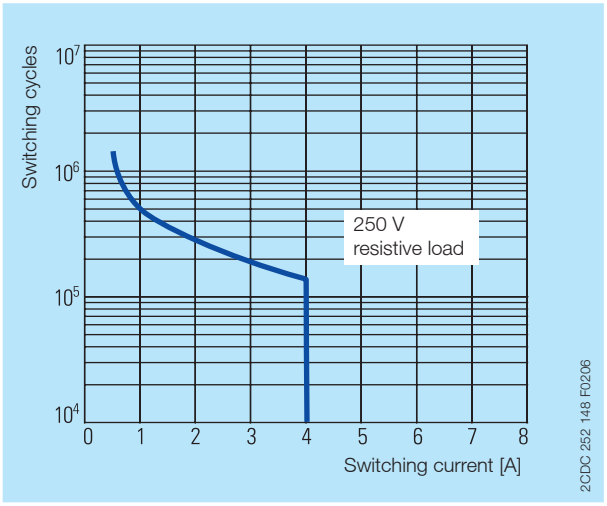

Contact life time / number of operations N
220 V 50 Hz 1 AC, 360 operations/h

Dimensions

in **mm** and inches

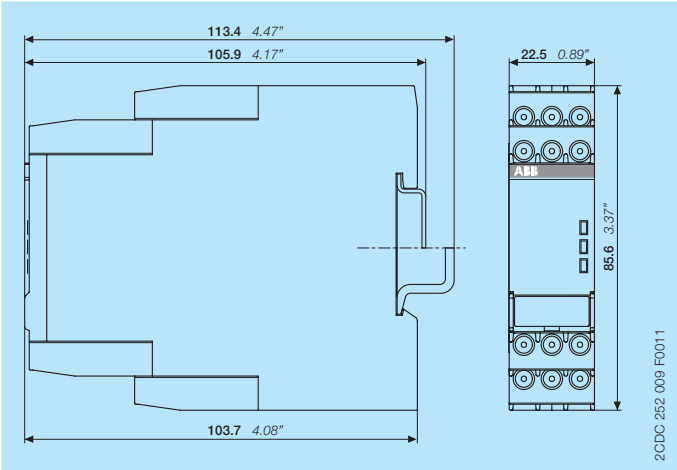

Accessories

in **mm** and inches

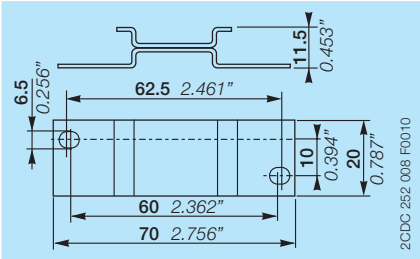

ADP.01 - Adapter for screw mounting

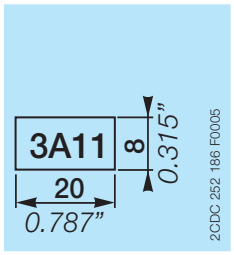

MAR.01 - Marker label for devices without DIP switches

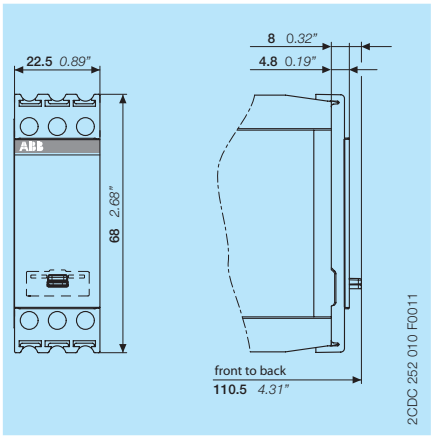

COV.11 - Sealable transparent cover

Further documentation

Document title	Document type	Document number
Electronic relays and controls	Catalog	2CDC 110 004 C02xx
Operating and installation instructions CM-MSS.11, CM-MSS.21, CM-MSS.31	Instruction manual	1SVC 730 660 M0000

You can find the documentation on the internet at www.abb.com/lowvoltage
-> Automation, control and protection -> Electronic relays and controls -> Measuring and monitoring relays

CAD system files

You can find the CAD files for CAD systems at http://abb-control-products.partcommunity.com
-> Low Voltage Products & Systems -> Control Products -> Electronic Relays and Controls

Contact us

ABB STOTZ-KONTAKT GmbH
P. O. Box 10 16 80
69006 Heidelberg, Germany
Phone: +49 (0) 6221 7 01-0
Fax: +49 (0) 6221 7 01-13 25
E-mail: info.desto@de.abb.com

You can find the address of your local sales organisation on the ABB home page
http://www.abb.com/contacts
-> Low Voltage Products and Systems

Document number 2CDC 112 217 D0201 Rev. F (01/2018)

Note:
We reserve the right to make technical changes or modify the contents of this document without prior notice. With regard to purchase orders, the agreed particulars shall prevail. ABB AG does not accept any responsibility whatsoever for potential errors or possible lack of information in this document.

We reserve all rights in this document and in the subject matter and illustrations contained therein. Any reproduction, disclosure to third parties or utilization of its contents – in whole or in parts – is forbidden without prior written consent of ABB AG.

Copyright© 2018 ABB
All rights reserved