SY 25 TR

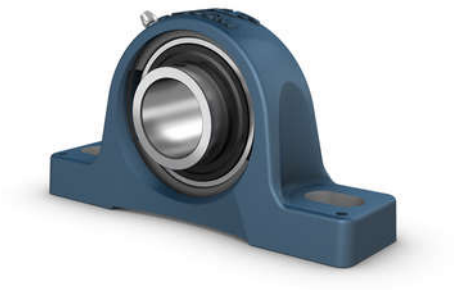

Pillow block ball bearing unit with extended inner ring and set screw locking, cast iron, ISO standards

Pillow (plummer) block ball bearing units consist of an insert bearing mounted in a cast iron housing that can be bolted to a support surface. This variant is suitable for applications with both constant and alternating directions of rotation. It has an inner ring extended on both sides and is locked onto the shaft by tightening a set screw on the inner ring, making it easy to mount.

- Strong
- Ready to mount
- Lubricated and sealed bearing
- Quick locking onto the shaft
- Cost-effective

Overview

Dimensions

Bearing width, total	34.1 mm
Centre distance between bolt holes	102 mm
Centre height (pillow block)	36.5 mm
Housing overall width	36 mm
Shaft diameter	25 mm

Performance

Basic dynamic load rating	14 kN
Basic static load rating	7.8 kN
Limiting speed	4 300 r/min

Properties

Bore type	Cylindrical
Coating	Without
Fastening bolt hole type	Plain
Housing type	Pillow block
Lubricant	Grease
Material, bearing	Bearing steel
Material, housing	Cast iron
Number of bolt holes for fasteners	2
Relubrication hole	With
Relubrication nipple	With
Retaining feature, inner ring	Set screws
Rubber seating ring	Without
Sealing type	Contact, multiple

Sealing, bearing	Seal and flinger on both sides
Sealing, unit	Optional end cover

Technical Specification

Compliance with standard	ISO
Purpose specific	For material handling applications
Housing material	Cast iron
Sealing solution	Multiple seals

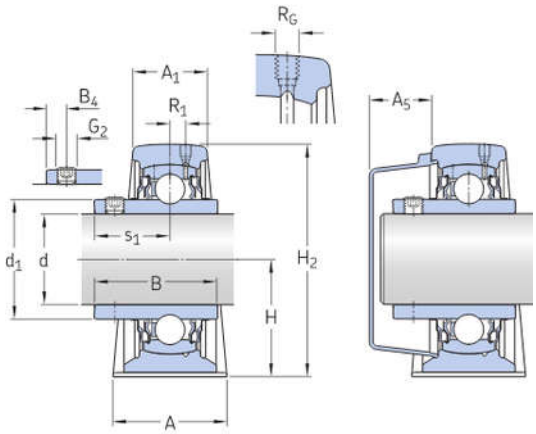

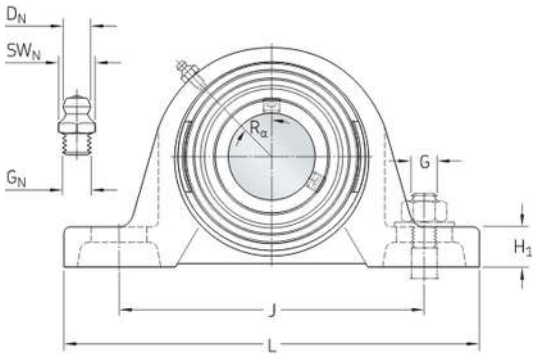

Dimensions

d	25 mm	Bore diameter
d_1	≈ 33.74 mm	Shoulder diameter inner ring
A	36 mm	Base width
A_1	22 mm	Top width
A_5	20.5 mm	Standout of end cover
B	34.1 mm	Width of inner ring
B_4	5 mm	Distance from locking device side face to thread centre
H	36.5 mm	Height of spherical seat centre
H_1	16 mm	Foot height
H_2	70 mm	Overall height
J	102 mm	Distance between attachment bolts
J	max. 110 mm	Distance between attachment bolts
J	min. 94 mm	Distance between attachment bolts
L	130 mm	Overall length
N	11.5 mm	Diameter of attachment bolt hole
N_1	19.5 mm	Length of attachment bolt hole
s_1	19.8 mm	Distance from locking device side face to raceway centre

Threaded hole

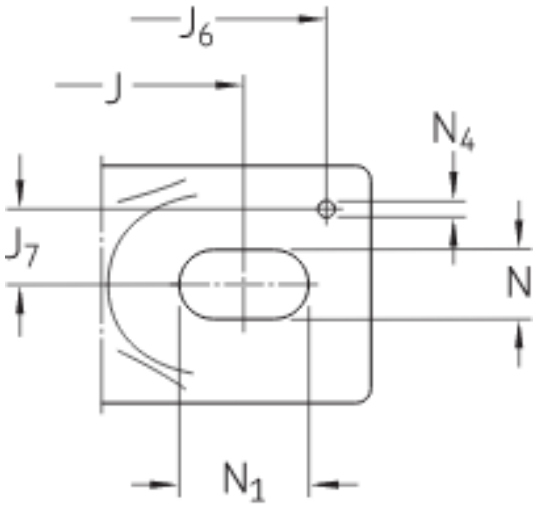

R_c	1/4-28 UNF	Housing thread for the grease fitting
R_1	2 mm	Axial position of the housing thread
R_o	45 °	Angular position of the housing thread

Grease fitting

D_1	6.5 mm	Diameter of head sphere of grease fitting
S\	7 mm	Hexagonal key size for the grease fitting
G_1	1/4-28 SAE-LT	Thread of grease fitting

Dowel pins

J_6	120 mm	Distance of dowel pins
J_7	13 mm	Axial offset of dowel pins
N_4	4 mm	Recommended diameter for dowel pins

Calculation data

Basic dynamic load rating	C	14 kN
Basic static load rating	C_0	7.8 kN
Fatigue load limit	P_u	0.335 kN
Limiting speed		4 300 r/min
with shaft tolerance h6		

Mass

Mass bearing unit	0.73 kg

Mounting information

Set screw	G_2	M6x0.75
Hexagonal key size for set screw		3 mm
Recommended tightening torque for set screw		4 Nm

Recommended diameter for attachment bolts, mm	G	10 mm
Recommended diameter for attachment bolts, inch	G	0.375 in

Included products

Housing	SY 505 M
Bearing	YAR 205-2RF

Associated products

End cover	ECY 205

Terms and conditions

By accessing and using this website / app owned and published by AB SKF (publ.) (556007-3495 · Gothenburg) ("SKF"), you agree to the following terms and conditions:

Warranty Disclaimer and Limitation of Liability

Although every care has been taken to assure the accuracy of the information on this website / app, SKF provides this information "AS IS" and DISCLAIMS ALL WARRANTIES, EXPRESS OR IMPLIED, INCLUDING, BUT NOT LIMITED TO, IMPLIED WARRANTIES OF MERCHANTABILITY AND FITNESS FOR A PARTICULAR PURPOSE. You acknowledge that your use of this website / app is at your sole risk, that you assume full responsibility for all costs associated with use of this website / app, and that SKF shall not be liable for any direct, incidental, consequential, or indirect damages of any kind arising out of your access to, or use of the information or software made available on this website / app. Any warranties and representations in this website / app for SKF products or services that you purchase or use will be subject to the agreed upon terms and conditions in the contract for such product or service. Further, for non-SKF websites / apps that are referenced in our website / app or where a hyperlink appears, SKF makes no warranties concerning the accuracy or reliability of the information in these websites / apps and assumes no responsibility for material created or published by third parties contained therein. In addition, SKF does not warrant that this website / app or these other linked websites / apps are free from viruses or other harmful elements.

Copyright

Copyright in this website / app copyright of the information and software made available on this website / app rest with SKF or its licensors. All rights are reserved. All licensed material will reference the licensor that has granted SKF the right to use the material. The information and software made available on this website / app may not be reproduced, duplicated, copied, transferred, distributed, stored, modified, downloaded or otherwise exploited for any commercial use without the prior written approval of SKF. However, it may be reproduced, stored and downloaded for use by individuals without prior written approval of SKF. Under no circumstances may this information or software be supplied to third parties.
This website /app includes certain images used under license from Shutterstock, Inc.

Trademarks and Patents

All trademarks, brand names, and corporate logos displayed on the website / app are the property of SKF or its licensors, and may not be used in any way without prior written approval by SKF. All licensed trademarks published on this website / app reference the licensor that has granted SKF the right to use the trademark. Access to this website / app does not grant to the user any license under any patents owned by or licensed to SKF.

Changes

SKF reserves the right to make changes or additions to this website / app at any time.