Series 56

IP67 250VDC/1A (non illuminated) 110VDC/0.2A (illuminated)

Choose one component from each of the coloured sections to assemble a complete switch.
For other options or further information please contact your local sales office.

Product Profile

The Series 56 is a high quality switch range that includes pushbuttons and indicators.

Options include double sided pushbuttons, glass mount pushbuttons, raised palm push lenses, raised tactile symbols and Braille front bezels.

Technical data see page 73
Technical drawings see pages 74-77

- IP67 front protection
- Switch Rating:
  Minimum: 5VDC, 5mA
  Maximum: 137VDC, 200mA
- Electrical Strength:
  4000VAC, 50Hz
  1 min between all terminals and mounting plate
- 200mm cable standard
- Options for cable length and LED colours
- As standard AMP connector with plug in housing 2.8 x 0.8mm

Double sided pushbutton



Double sided pushbutton for glass mount with 24VDC operated LEDs

Part No.	LED colour	Lens colour	Lens style
56-3213.4*004*	Red	*	Raised metal
56-2213.4*004*	Green	*	Raised metal
56-1213.4*004*	Red/Green	*	Raised metal
56-3213.260026	Red	Natural anodised	Flush metal
56-2213.260026	Green	Natural anodised	Flush metal
56-1213.260026	Red/Green	Natural anodised	Flush metal
56-3213.1*001*	Red	*	Flush plastic
56-3213.1*001*	Green	*	Flush plastic
56-3213.1*001*	Red/Green	*	Flush plastic

*Denotes colour of lens add 2= red, 4=Yellow, 5=green, 6=blue

For complete switch also order A

Single sided pushbutton



Single sided pushbutton for glass mount with metal palm-push raised lens with 24VDC operated LEDs

Part No.	LED colour	Lens colour	Lens style
56-3213.4*00G	Red	*	Raised metal
56-2213.4*00G	Green	*	Raised metal
56-1213.4*00G	Red/Green	*	Raised metal
56-3213.2600G	Red	Natural anodised	Flush metal
56-2213.2600G	Green	Natural anodised	Flush metal
56-1213.2600G	Red/Green	Natural anodised	Flush metal
56-3213.1*00G	Red	*	Flush plastic
56-2213.1*00G	Green	*	Flush plastic
56-1213.1*00G	Red/Green	*	Flush plastic

*Denotes colour of lens add 2= red, 4=Yellow, 5=green, 6=blue

For complete switch also order A

Single sided pushbutton



Single sided panel mount pushbutton switch with 24VDC operated LEDs

Part No.	LED colour	Lens style
56-130.22.200.25.*	Yellow	Raised metal
56-130.22.200.23.*	Green	Raised metal
56-130.22.200.21.*	Green/Red	Raised metal
56-130.22.200.24.*	Red	Raised metal
56-130.22.200.22.*	Red/Green	Raised metal
56-030.05.200.00.*	Without	Raised metal

*Denotes colour of lens add 04=blue, 02=yellow, 03=green, 05=natural, 01=red

For complete switch also order A



Single sided panel mount pushbutton switch with 24VDC operated LEDs

Part No.	LED colour	Lens colour	Lens style
56-120.22.200.25.05	Yellow	Natural anodised	Flush metal
56-120.22.200.23.05	Green	Natural anodised	Flush metal
56-120.22.200.22.05	Red/Green	Natural anodised	Flush metal
56-120.22.200.24.05	Red	Natural anodised	Flush metal
56-120.22.200.21.05	Red/Green	Natural anodised	Flush metal
56-020.05.200.00.05	Without	Natural anodised	Flush metal

For complete switch also order A



Single sided panel mount pushbutton switch with 24VDC operated LEDs

Part No.	LED colour	Lens style
56-110.22.200.25.*	Yellow	Flush plastic
56-110.22.200.23.*	Green	Flush plastic
56-110.22.200.21.*	Green/Red	Flush plastic
56-110.22.200.24.*	Red	Flush plastic
56-110.22.200.22.*	Red/Green	Flush plastic
56-010.05.200.00.*	Without	Flush plastic

*Denotes colour of lens add 04=blue, 02=yellow, 03=green, 05=natural, 01=red

For complete switch also order A

Choose one component from each of the coloured sections to assemble a complete switch.
For other options or further information please contact your local sales office.

Single sided pushbutton



Single sided pushbutton for panel mount with 110VDC operated LED's

Part No.	LED colour	Lens style
56-530.22.200.25.*	Yellow	Raised metal
56-530.22.200.23.*	Green	Raised metal
56-530.22.200.21.*	Green/Red	Raised metal
56-530.22.200.24.*	Red	Raised metal
56-530.22.200.22.*	Red/Green	Raised metal
56-030.05.200.00*	Without	Raised metal

*Denotes colour of lens add 04=blue, 02=yellow, 03=green, 05=natural, 01=red

For complete switch also order A



Single sided pushbutton for panel mount with 110VDC operated LED's

Part No.	LED colour	Lens colour	Lens style
56-520.22.200.25.05	Yellow	Natural anodised	Flush metal
56-520.22.200.23.05	Green	Natural anodised	Flush metal
56-520.22.200.22.05	Red/Green	Natural anodised	Flush metal
56-520.22.200.24.05	Red	Natural anodised	Flush metal
56-520.22.200.21.05	Red/Green	Natural anodised	Flush metal
56-020.05.200.00.05	Without	Natural anodised	Flush metal

For complete switch also order A



Single sided pushbutton for panel mount with 110VDC operated LED's

Part No.	LED colour	Lens style
56-510.22.200.25.*	Yellow	Flush plastic
56-510.22.200.23.*	Green	Flush plastic
56-510.22.200.21.*	Green/Red	Flush plastic
56-510.22.200.24.*	Red	Flush plastic
56-510.22.200.22.*	Red/Green	Flush plastic
56-010.05.200.00*	Without	Flush plastic

*Denotes colour of lens add 04=blue, 02=yellow, 03=green, 05=natural, 01=red

For complete switch also order A

Single sided indicator



Single sided indicator for panel mount with or without hidden legends/text, 24VDC. Up to three lines of text or a symbol can be shown

Part No.	LED colour	Lens colour	Markings
56-3213.90	Red	Red	Symbol*
56-3213.91	Red	Red	1 line*
56-3213.92	Red	Red	2 lines*
56-3213.93	Red	Red	3 lines*
56-3213.8	Red	Red	Without
56-9213.8	White	White	Without

*Text on symbol must be specified when ordering

For complete switch also order A

Single sided raised indicator



Single sided indicator for panel mount with raised front lens. The illumination can be red, yellow, green, blue or white. Standard voltage 24VDC or 110VDC

Part No.	LED colour	Lens colour	Voltage
56-2213.70	Green	Green	24VDC
56-3213.70	Red	Red	24VDC
56-6213.70	Yellow	Yellow	24VDC
56-8213.70	Blue	Blue	24VDC
56-9213.70	White	White	24VDC
56-2913.70	Green	Green	110VDC
56-3913.70	Red	Red	110VDC
56-6913.70	Yellow	Yellow	110VDC
56-8913.70	Blue	Blue	110VDC
56-9913.70	White	White	110VDC

For complete switch also order A

A Accessories



Round front bezel for single sided glass mount pushbutton, single pushbutton switches, indicators, and mounting on the exterior side of the double sided switch

Part No.	Colour	Bezel material
56-1000	Black	Plastic
56-1600	Blue RAL 5017	Plastic
56-1800	Dark grey RAL 7043	Plastic
56-1800A	Light Grey RAL 7040	Plastic
56-1500	Green RAL 6024	Plastic
56-1300	Orange RAL 2003	Plastic
56-1200	Red RAL 3020	Plastic
56-1400	Yellow RAL 1023	Plastic
56-3600	Matt Chrome	Metal
Also available in square		

For complete double sided switch also order Interior Front Bezel

Series 56

IP67 250VDC/1A (non illuminated) 110VDC/0.2A (illuminated)

INDICATOR | PUSHBUTTON | E-STOP | MUSHROOM | KEYLOCK | SELECTOR

Choose one component from each of the coloured sections to assemble a complete switch.
For other options or further information please contact your local sales office.

A Accessories



Round front bezel for mounting on the interior side of double sided glass mount pushbuttons

	Part No.	LED/Colour	Bezel material
	56-5600	Blue RAL 5017	Plastic
	56-5800	Dark grey RAL 7043	Plastic
	56-5800A	Light Grey RAL 7040	Plastic
	56-5500	Green RAL 6024	Plastic
	56-5300	Orange RAL 2003	Plastic
	56-5200	Red RAL 3020	Plastic
	56-5400	Yellow RAL 1023	Plastic
	56-7600	Matt Chrome	Metal

For complete double sided switch also order External Front Bezel



Round plastic front bezel with text and braille for use with single sided glass mount pushbutton, single pushbutton switches and indicators

	Part No.	LED/Colour	Markings
	56-1491	Yellow RAL 1023	Open
	56-1492	Yellow RAL 1023	Close
	56-1391	Orange RAL 2003	Open
	56-1392	Orange RAL 2003	Close

Other square, colour and language options available

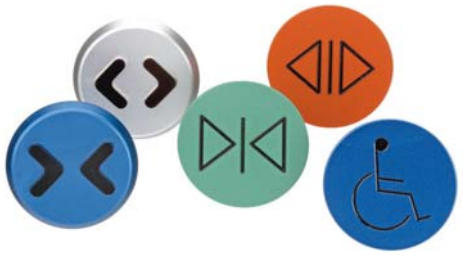

Symbols available for front lens, engraved or embossed. Many more available on request. Quote symbol number when ordering switch

Marking	Symbol No.
	00.868
	00.869
	00.835
	00.836
	40089

A Accessories



Dismantling tool for front bezel

	Part No.
	56-998

Complete switch



Features
- IP67 front sealed, IP65 sealed from behind
- Intensive 'Halo' LED illumination
- Raised pressel for palm operation
- Raised or engraved, standard or customised symbols
- Braille options
- Low back panel depth
- Low actuation force, low travel and snap action contacts for good tactile feel for disabled users
- CE (declaration of conformity)

Switching system

Self-cleaning, double-breaking snap-action switching system
1 normally open contact, momentary function

Material

Connection cable
Halogene free polydefine mixture

Lens
Aluminium anodized or thermoplastic
polybutylenterephthalat (PBT), as per UL 94 V0

Front bezel
Zinc matt chromium plated or thermoplastic
polybutylenterephthalat (PBT), as per UL 94 V0

Actuator
Polycarbonate (PC), as per UL 94 V0

Material of contacts
gold-plated silver

Mechanical characteristics

Connection method
Cable 4-poles with plug-in connection 2.8 x 0.8 mm
flat plug-in housing rectangular, AMP No. 626 057-0

Counterpart to AMP flat plug-in housing
(not part of delivery)
receptacle housing AMP No. 626 056-0
receptacle socket AMP No. 160 655-2

Other version:
cable 4 poles with plug-in connection 6.3 x 0.8 mm
flat plug-in housing rectangular, AMP No. 180 901-0

Counterpart to AMP flat plug-in housing
(not part of delivery)
receptacle housing AMP No. 180 900-0
receptacle socket AMP No. 160 860-2

Wire cross-section
0.5 mm^2

Fixing screws
Single pushbutton | indicator for standard mounting M4 x 8mm
double pushbutton for glass mounting M4 x 25 mm
single pushbutton for glass mounting M4 x 20 mm
(for glass up to 5 mm)
single pushbutton for glass mounting M4 x 16 (for 4 mm glass)

Tightening torque
Screws at the single pushbutton | indicator for
front panel mounting 80 Ncm...100 Ncm
Screws at the single pushbutton | double pushbutton for
glass mounting 50 Ncm

Actuation force
6 N...12 N

Actuation travel
~0.5 mm

Mechanical life
2 million operations

Key (mounting | dismantling)
hexagon socket wrench size 2.5 mm

Electrical characteristics

Illumination
Ready status, 8 LED green or red or yellow
optical switch on status, 2 LED green or red
(3 LED for special versions)
supply voltage 24/36/48/72/96/110 VDC
tolerance +25%...-30%
Current consumption <50 mA

Switch rating
min. 5 VDC, 5 mA
max. 137 VDC/VAC, max. 200 mA

EMC approved, as per
IEC/EN 61000-4-6
IEC/EN 61000-4-3
IEC/EN 61000-4-4
IEC/EN 61000-4-2
IEC/EN 61000-4-5
CISPR 22, EN 55022

Electric strength
4000 VAC, 50 Hz, 1 min, between all terminals and mounting plate

Environmental conditions

Storage temperature
-45 °C...+90 °C

Operating temperature
-40 °C...+80 °C

Protection degree
Front IP 67
Back IP 65

Climate resistance
Damp heat, cyclic:
6 cycles, +25°C...+55°C / 95%...100% relative humidity,
as per IEC 60068-2-30

Damp heat, state:
56 days, +40°C / 93% relative humidity, as per IEC 60068-2-56

Rapid change of temperature:
100 cycles, -40 °C...+80 °C, as per IEC 60068-2-14

Shock resistance
(semi-sinusoidal)
max. 250 m/s^2, pulse width 11 ms, as per IEC 60068-2-27

Vibration resistance
(sinusoidal)
max. 100 m/s^2 at 10 Hz...2000 Hz, as per IEC 60068-2-6

Approvals

CE (declaration of conformity)

56 Single pushbutton

For glass mounting

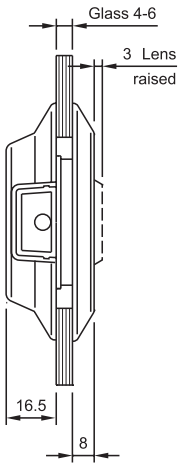

56 Double pushbutton

For glass mounting

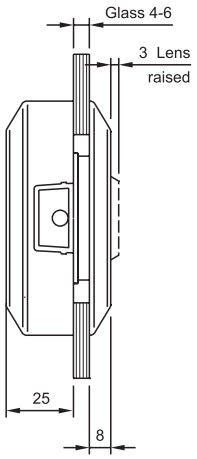

56 Indicator

For front panel mounting standard mounting

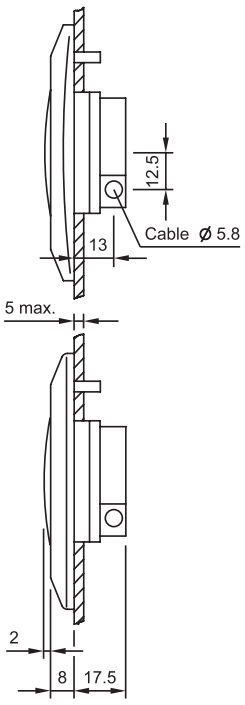

56 Single pushbutton

For front panel mounting standard mounting

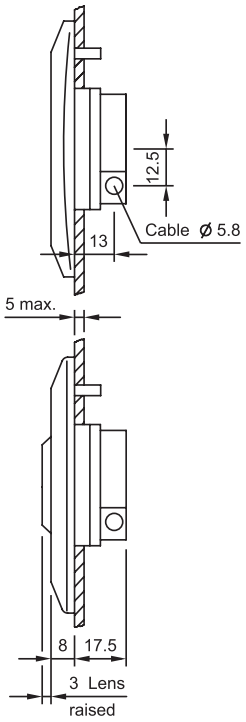

56 Indicator

For front panel mounting flush mounting

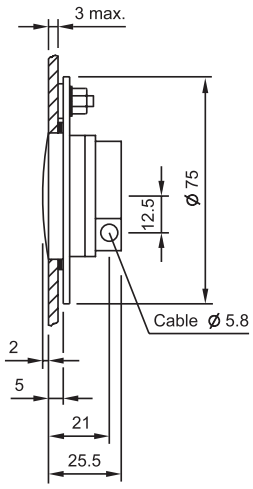

56 Single pushbutton

For front panel mounting flush mounting

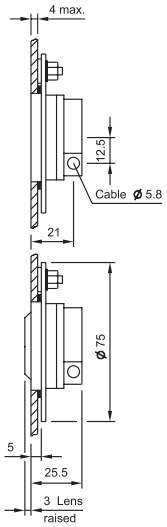

56 Indicator

For front panel mounting

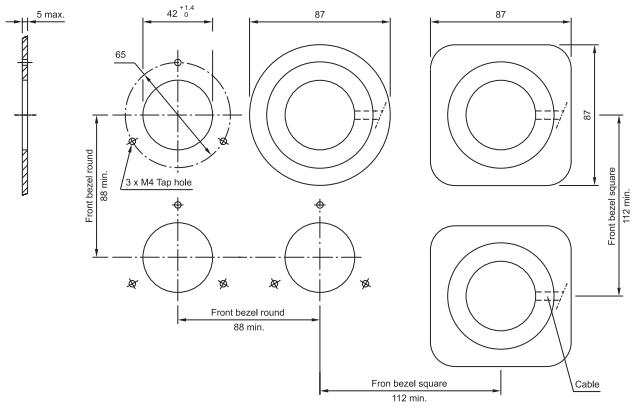

56 Single pushbutton

For front panel mounting

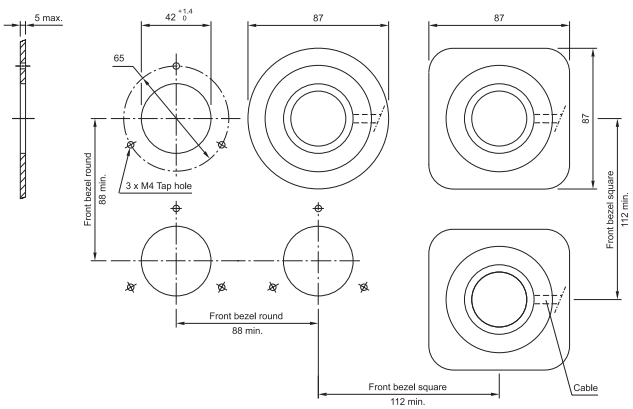

56 Single / Double pushbutton

For glass mounting

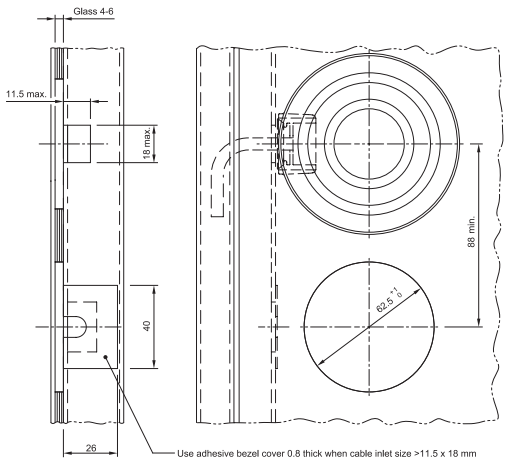

56 Indicator

For front panel mounting flush mounting

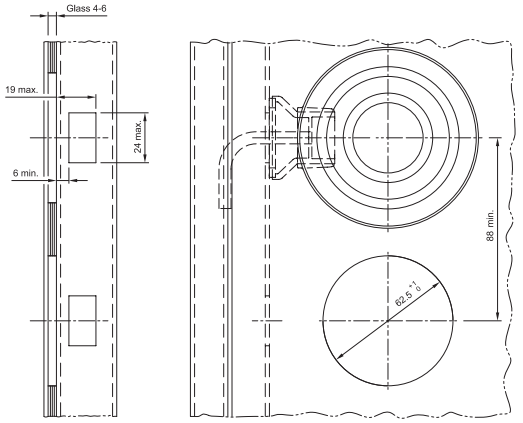

56 Single pushbutton

For front panel mounting flush mounting

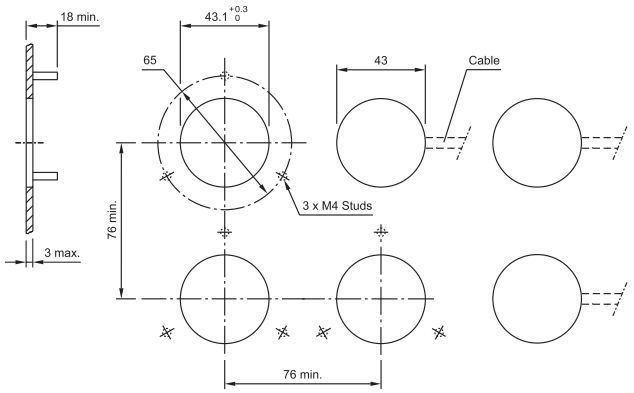

56 Indicator

For front panel mounting standard/flush

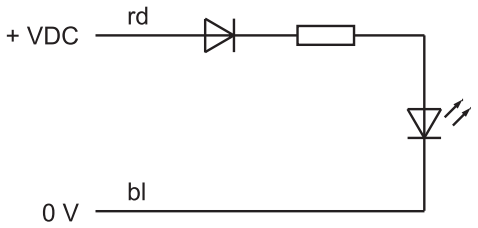

56 Single pushbutton

For front panel mounting

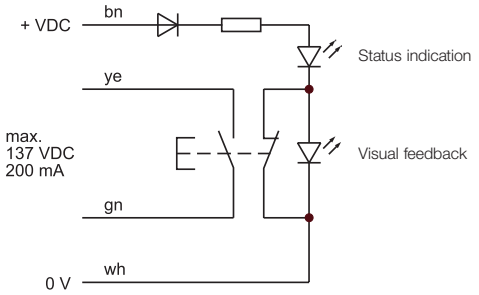

56 Single pushbutton

For front panel mounting/standard mounting

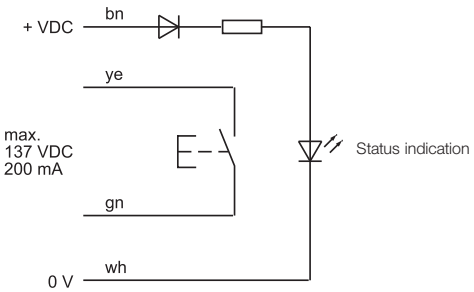

56 Single pushbutton

For front panel mounting/standard mounting, non-illuminated

